OWNER'S MANUAL

Montesa

Cride

This manual is to be considered a permanent part of the motorcycle and must remain with it in the event it is sold.

This publication includes the latest production information available at the time of printing. Montesa-Honda, S.A.U. reserves the right to make changes at any time, with no advance notice or accepting any sort of responsibility.

No part of this publication may be reproduced without the pertinent prior written permission.

The vehicle illustrated in this Owner's Manual may not match your own vehicle.

© 2020 Montesa-Honda S.A.U.

Welcome

Congratulations on buying your new Montesa motorcycle! By having chosen Montesa, you now form part of a family of satisfied customers around the world who value Montesa's reputation as the creator of quality products.

To ensure your safety and enjoyment:

- Read this owner's manual carefully.
- Follow all the recommendations and procedures included in it.
- Pay careful attention to the safety messages included in the manual and on the motorcycle itself.

- The following codes in this manual indicate each country.
- The illustrations included in this publication correspond to the ED model.

Country codes

Code	Country
ED	European direct sales

A few words about safety

Your safety and the safety of others is very important. Operating this motorcycle safely is an important responsibility.
To help you make informed decisions about safety, we have provided operating procedures and other information on safety labels and in this manual. This information alerts you to potential hazards that could hurt you or others.
Of course, it is not practical or possible to warn you about all hazards associated with operating or maintaining a motorcycle. Therefore, you must use common sense.

You will find important safety information in several forms, including:

- Safety labels on the motorcycle.
- Safety Messages preceded by a safety alert symbol and one of three safety words: DANGER, WARNING, or CAUTION.
  These safety messages mean:

2 DANGER

You WILL be KILLED or SERIOUSLY HURT if you don't follow instructions.

2 WARNING

You MAY be KILLED or SERIOUSLY HURT if you don't follow instructions.

2 CAUTION

You MAY be HURT if you don't follow instructions.

Other important information is also included under the following titles:

NOTICE Information intended to help you prevent damage to your motorcycle, other property or the environment.

Index

Motorcycle safety	P. 2
Operating guide	P. 19
Maintenance	P. 37
Locating malfunctions	P. 82
Information	P. 94
Specifications	P. 105
INDEX	P. 109

Motorcycle safety

This section includes important information for the safe operation of your motorcycle.
Read this section to ensure your safety.

Safety guidelines ..... P. 3
Pictograms ..... P. 6
Safety precautions ..... P. 10
Precautions while riding ..... P. 11
Accessories & modifications ..... P. 15
Off-road safety ..... P. 16
Loads ..... P. 17

Safety guidelines

To ensure your safety, follow these guidelines:

- Carry out all the normal, customary inspections specified in this manual.
- Turn off the engine and keep sparks and flames away from the motorcycle before filling the fuel tank.
- Do not run the engine in an enclosed or semi-enclosed space. The carbon dioxide present in the exhaust is toxic and can kill you.

Always wear a helmet when riding

It's a fact: helmets and protective gear significantly reduce the number and severity of injuries to the head and other areas of the body. So always wear an approved motorcycle helmet and protective equipment. 2 P. 10

Before riding

Make sure that you are physically and mentally capable, and that you have not consumed alcohol or drugs. Check that you are using a duly approved motorcycle helmet and protective gear.

NOTICE This motorcycle is not designed to transport a passenger.

Take the time you need to learn and practise

Even if you have operated other motorcycles, practise riding in a safe area to familiarise yourself with the operation and handling of this motorcycle and get used to its weight and size.

Always remain alert

Pay attention to other vehicles around you at all times and do not assume that other drivers have detected your presence. Be ready to stop suddenly or take evasive action.

continued

Make yourself visible on the road

Make yourself visible, especially at night, wearing bright reflective clothing, positioning yourself so that other drivers can see you, use the appropriate signals before turning or changing lanes and use your horn, if necessary.

Be aware of the hazards of off-road riding

The terrain can pose a variety of challenges for off-road riding.
Constantly survey the terrain to anticipate turns, fallen trees, rocks, uneven ground and other hazards. Always ride slow enough to be able to see hazards and react to them.

Ride within your limits

Never ride beyond your personal ability or faster than conditions warrant. Fatigue and lack of attention can reduce your
ability to act with good judgement and ride safely.

Don’t drink and ride

Alcohol is not compatible with riding. One single drink can reduce your ability to respond to continuously changing conditions, and your response time worsens with each additional drink. Therefore, if you drink, don't ride and don't let your friends drink and ride.

Maintain your Montesa in proper safety conditions

It is important to provide proper maintenance for your motorcycle and keep it in good running condition. A malfunction may pose a major problem, especially if it occurs off major roads, away from home. Inspect your motorcycle before every use and perform all recommended maintenance. Never exceed load limits (2 P. 17), and do not alter the motorcycle or install accessories that render it unsafe (2 P. 15).

If you are involved in an accident

Personal safety is your priority. If you or anyone else has been injured, take time to assess the severity of the injuries and whether it is safe to continue riding. Request emergency assistance, if necessary. Also follow applicable laws and regulations if another person or vehicle is involved in the accident.

If you decide to continue riding, assess the condition of your motorcycle. If the engine is still running, turn it off. Check for any leaks, make sure critical nuts and bolts are tightened and check the handlebars, levers, controls, brakes and wheels. Ride slowly and cautiously.
The motorcycle may have suffered damage that is not immediately noticeable. Have your motorcycle carefully inspected at a qualified garage as soon as possible.

Hazard of carbon monoxide poisoning

The exhaust contains carbon monoxide, a poisonous gas that is both colourless and odourless. Breathing carbon monoxide can cause the loss of consciousness and be lethal.

If you start the engine in a small, enclosed space, even if only partially enclosed, the air you breathe could contain a hazardous amount of carbon dioxide. Never start the motorcycle inside a garage or another enclosed space.

2 WARNING

Carbon monoxide is poisonous.
If breathed, it can lead to loss of consciousness and even kill you.

Avoid areas or activities that expose you to carbon dioxide.

Pictograms

The meanings of the labels are explained on the following pages. Some labels warn you about potential hazards that can cause serious injury. Others provide important safety information. Read this information carefully and do not remove the labels.

If a label comes off or becomes difficult to read, contact your dealer for replacements.

Each label has a specific symbol.
These symbols mean the following:

Read the instructions in the Owner's manual carefully.

Read the instructions in the Shop manual carefully. For your safety, only take your motorcycle to dealerships affiliated with your distributor for service and maintenance.

DANGER
(with a RED background)
You WILL be KILLED or SERIOUSLY HURT if you don't follow instructions.
WARNING
(with an ORANGE background)
You MAY be KILLED or SERIOUSLY HURT if you don't follow instructions.
CAUTION
(with a YELLOW background)
If you fail to follow these instructions, YOU MAY BE HURT.

RADIATOR CAP LABEL
DANGER
Do not ever open it when it is hot.
The hot coolant will burn you.
The pressure relief valve is activated at 1,1 kgf/cm^2.

LOADING AND ACCESSORIES WARNING LABEL
WARNING
LOADING AND ACCESSORIES

- The stability and handling of this motorcycle can be affected by the addition of accessories and luggage.
- Read the instructions in this owner's manual and the installation guide carefully before installing any accessory.
- The total weight of the accessories and luggage, added to the rider's own weight, must not exceed **111 kg**, which is the maximum weight capacity.
- The addition of large fairings mounted on the fork or handlebars is not recommended.
- It is totally prohibited to transport cargo on the rear fender. The motorcycle has not been designed for this purpose.

continued

REAR DAMPER LABEL
PETROL REFUELING
Do not open.
Do not heat.

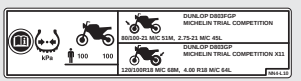

TYRE INFORMATION LABEL
Cold tyre pressure (only for road use):
[Rider only]

Front	**100 kPa (1,02 kgf/cm²)**
Rear	**100 kPa (1,02 kgf/cm²)**

Tyre size (Dunlop):

Front	**D803FGP** **80/100-21 M/C 51M**
Rear	**D803GP** **120/100R18 M/C 68M**

Tyre size (Michelin):

Front	**TRIAL COMPETITION** **2.75-21 M/C 45L**
Rear	**TRIAL COMPETITION X11** **4.00 R18 M/C 64L**

ONLY ONE RIDER LABEL
This motorcycle is not designed to transport a passenger.
SAFETY REMINDER LABEL
- Read owner's manual carefully.
- For your own protection, always wear a helmet and protective gear.
FUEL LABEL
- (E5) Ethanol (ethyl alcohol) 5% by volume.
- (E10) Ethanol (ethyl alcohol) 10% by volume.
- Use unleaded gasoline, octane number 95 (RON) or higher.

DRIVE CHAIN LABEL
Keep the chain well-adjusted and lubricated.
25 to 35 mm of free play.

Safety precautions

- Ride carefully and keep your hands on the handlebars and your feet on the footrests.
- Always keep the safety of other riders in mind.

NOTICE This motorcycle is not designed to transport a passenger.

Protective gear

Make sure that you wear an approved motorcycle helmet, eye protection and high-visibility protective clothing. Always ride alert, adapting to weather conditions and the road.

Helmet

Approved, highly visible and the appropriate size for your head.

- It should fit comfortably, but securely, with the chin strap fastened.
- Visor with a clear field of vision or other approved form of eye protection.

2 WARNING

Not wearing a helmet increases the chance of suffering serious injuries or even death in the case of a collision.

Make sure that you always wear an approved helmet and protective gear.

NOTICE This motorcycle is not designed to transport a passenger.

Gloves

Abrasion-resistant leather gloves providing full coverage.

Riding boots or footwear

Sturdy boots with non-slip soles and ankle protection.

Jacket and pants

Highly-visible, long-sleeved protective jacket and sturdy pants (or a protective racing suit).

Additional accessories for off-road riding

Road gear may also be appropriate for occasional off-road riding. However, if you plan on pursuing serious off-road riding, you will need specific gear for this purpose. In addition to a helmet and eye protection, you are recommended to wear boots and gloves for off-road riding, riding pants with hip and knee pads, and a jumper with padded elbows and chest and shoulder protection.

Precautions while riding

Running-in

For the first 500 km, follow these guidelines to ensure the reliability and future performance of your motorcycle.

- Avoid opening the throttle all the way and sudden accelerations.
- Avoid sudden braking and quick downshifting.
- Be cautious when riding.

continued

Braking

Follow the guidelines below:

- Avoid excessively sudden braking and downshifting.
  - u Sudden braking can reduce the stability of the motorcycle.
  - u Whenever possible, reduce speed before entering a curve; otherwise, there is a risk of skidding.
- Take precautions on surfaces with poor traction.
  - u The wheels may skid easier on these surfaces, and braking distances are greater.
- Avoid continuous braking.
  - u Repeated braking, for example, when descending long, steep slopes, can significantly overheat the brakes, which reduces their effectiveness. To reduce speed, use the engine brake and intermittently apply the brakes.

Engine brake

The engine brake helps reduce the speed of the motorcycle when the throttle is released. Downshift for more pronounced speed reduction. Use the engine brake and intermittently apply the brakes to reduce speed when descending long, steep slopes.

Wet surfaces or rain

Road surfaces become slippery when wet and wet brakes further reduce braking effectiveness. Take precautions when braking on wet surfaces.
If the brakes become wet, apply them while riding at a slow speed to help dry them.

Parking

- Park on firm, level surfaces.
- If you must park on a slightly sloped or less-than-firm surface, do so in such a way that the motorcycle cannot move or tip over.
- Make sure that the parts that reach high temperatures cannot come into contact with flammable materials.
- Do not touch the engine, the silencer or the brakes, or any other part that reaches high temperatures until they have cooled.
- To reduce the probability of theft, always lock the handlebars and remove the key when leaving the motorcycle.
  The use of an anti-theft system is also recommended.

Parking with the side stand

1. Turn off the engine.
2. Lower the side stand.
3. Lean the motorcycle slowly to the right, until its weight rests on the side stand.
4. Turn the handlebars all the way to the left.
5. Insert the key in the steering lock and turn it as far as it will go to the left.
   Then press the lock in all the way, turn the key back to the original position, and remove the key.

Refueling and suggestions on fuel

Follow these instructions to protect the engine and the catalytic converter:

- Only use unleaded petrol.
- It must be 95 octane (RON) or higher. If you use lower octane petrol, engine performance will be reduced.
- Do not use expired or dirty petrol or oil/petrol mixtures.
- Avoid getting dirt or water in the fuel tank.

NOTICE The fuel level in the motorcycle must be sufficient for the trip that is planned

Accessories & modifications

We strongly recommend not adding any accessory that has not been designed specifically for your motorcycle by Montesa, or making any modification that would affect its original design. Doing so may affect the safety of the motorcycle. Modifications to the motorcycle may also void the warranty and render the motorcycle illegal to use on public streets and thoroughfares. Before deciding to install accessories on the motorcycle, make sure that the modification is safe and legal.

2 WARNING

Inappropriate accessories or modifications may cause an accident in which you could be seriously injured or killed.

Follow all instructions in this owner's manual regarding accessories and modifications.

Do not pull a trailer or connect a sidecar to your motorcycle. This motorcycle was not designed for these accessories, and their use can seriously impair your motorcycle's handling.

Off-road safety

Before venturing out on unfamiliar terrain, learn to ride on a clear, obstacle-free off-road terrain.

- Obey all local laws and regulations pertaining to off-road riding at all times.
- Obtain permission to ride on private property. Do not ride in private areas and obey "Do not enter" signs.
- Ride with a fellow motorcycle rider so that you can help each other if necessary.
- It is very important to be familiar with the motorcycle in case a mishap occurs far from help.
- Never ride beyond your personal ability and experience, or faster than conditions warrant.
- Ride carefully if you are unfamiliar with the terrain. Hidden rocks, pits and ditches can cause serious accidents.
- Almost all off-road areas require the use of a silencer. Do not modify your exhaust system. Remember that excessive noise bothers everyone and creates a poor image of motorcycling.

Loads

- Transporting extra weight affects the handling, braking and stability of the motorcycle. Always ride at a safe speed in terms of the load you are transporting.
- Avoid transporting excessive weight and always remain within the weight limits.
  2 **Maximum weight / Maximum luggage capacity** P. 106
- Fasten luggage securely, so that it is balanced and near the centre of the motorcycle.
- Do not place objects near the lights or silencer.
- Never transport a passenger.
- Keep the load small and light when riding. Make sure that the luggage does not brush against other objects or interfere with your movements when changing position to maintain balance and stability.
- It is totally prohibited to transport cargo on the rear fender. The motorcycle has not been designed for this purpose.

2 WARNING

Excessive or incorrect loads may cause an accident in which you may be seriously hurt or even killed.

Follow all load limits and other guidelines included in this manual.

Operating guide

Location of the parts ..... P. 20
Instruments ..... P. 22
Indicators ..... P. 27
Switches ..... P. 28
Steering lock ..... P. 29
Starting the engine ..... P. 30
Gear shift ..... P. 31
Refuelling ..... P. 32
Suspensions ..... P. 34
Storage equipment ..... P. 36

Location of the parts

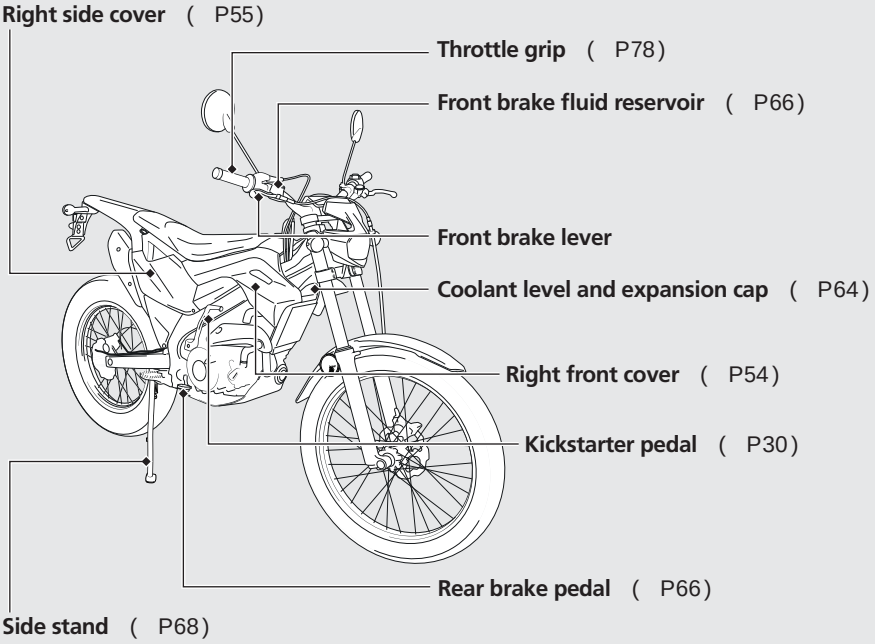

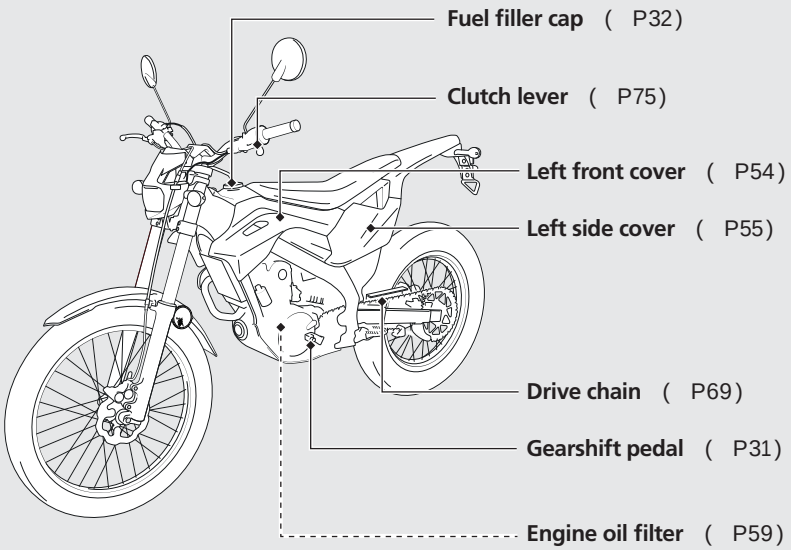
Fuel filler cap (P32)
Clutch lever (P75)
Left front cover (P54)
Left side cover (P55)
Drive chain (P69)
Gearshift pedal (P31)
Engine oil filter (P59)

Instruments

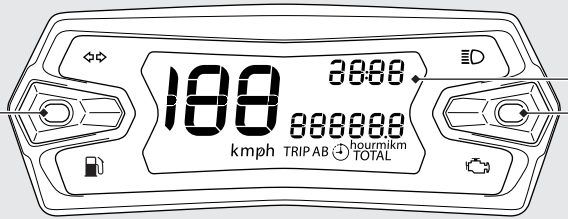

(MODE) button

(SET) button

Checking the display screen

When the motorcycle is started, the display screen, odometer (TOTAL distance travelled) and either km/h or mp/h segments light up, depending on the prior configuration.

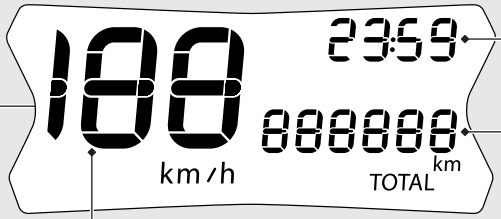

Clock
Shows hour and minute.

Total odometer [TOTAL] and tripmeter [TRIP A/B]
The (MODE) button toggles between the total odometer and tripmeter in normal view.

- Total odometer (TOTAL):
  Total distance travelled.
- Tripmeter (TRIP A, TRIP B):
  Distance travelled since the tripmeter was reset to zero (by pressing and holding the (SET) button to reset the value on the tripmeter screen to 0.0 km/miles).
- Ride time:
  Shows the ride time in (TOTAL), (TRIP A) and (TRIP B) modes.

Speedometer
Shows riding speed.
This shows your speed in kilometres per hour (km/h) or miles per hour (mph).

Instruments *(continued)*

Setting mode

The main screen is used to adjust the following settings:

1. Changing the speed units:

1. Start the motorcycle.
2. Press the (SET) button.
   - u Press less than 2 seconds to display the ride time (hour) or mileage (km / mi).
   - u Press and hold more than 10 seconds, the speed units will change from km/h to mph and vice versa, depending on their initial setting.

2. Changing from "TOTAL", "Trip A" o "Trip B".

1. Start the motorcycle.

The "TOTAL" distance is displayed by default.

2. Press the (MODE) button.
   - u Press less than 2 seconds to display "TOTAL", "TRIP A" o "TRIP B".
3. Press the (SET) button.
   - u Press less than 2 seconds to display the ride time (hour) or accumulated mileage (km/mi).

To reset "TRIP A" or "TRIP B", select the desired condition (accumulated mileage or ride time). Press and hold the (SET) button for more than 2 seconds.

Instruments *(continued)*

3. Clock settings

The clock will be displayed in 24h format if the unit of measure is set to **km**.

The clock will be displayed in 12h format if the unit of measure is set to **mi**.

24h

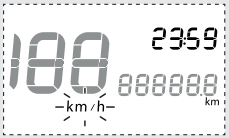

12h

1. Start the motorcycle.
2. Press the (MODE) + (SET) buttons.
   - u Press and hold more than 2 seconds. The clock will be set in the adjust mode with the hour display flashing.

- u Press the (MODE) button to change the hours.
  - Press less than 2 seconds, the digit will increase by one hour each time the button is pressed.
  - Keep the button pressed, the hour digit advances fast, release the button when the desired time is displayed.
- u Press the (SET) button to change the minutes.
  - Press less than 2 seconds, the digit will increase by one minute each time the button is pressed.
  - Keep the button pressed, the minute digit advances fast. Release the button when the desired minute is displayed.

❸ Press the (MODE) + (SET) buttons.

- u Press and hold more than 10 seconds to save the new values and exit the clock setting mode.
- u If no button is pressed for more than 10 seconds, the clock setting mode will end without saving the changes.

4. Coin battery

Odometer/Speedometer is equipped with a coin battery for keeping time when motorcycle is off.

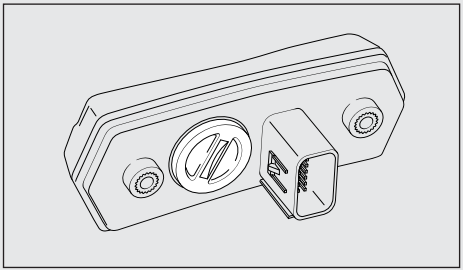

Coin size: CR2032

Indicators

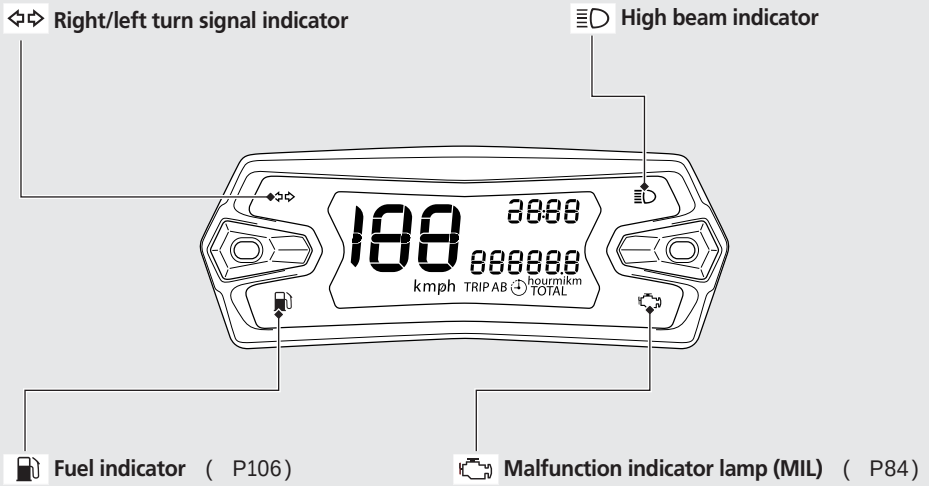
Right/left turn signal indicator
High beam indicator
kmph
TRIP AB
hour
mi
km
TOTAL
Fuel indicator (P106)
Malfunction indicator lamp (MIL) (P84)

Switches

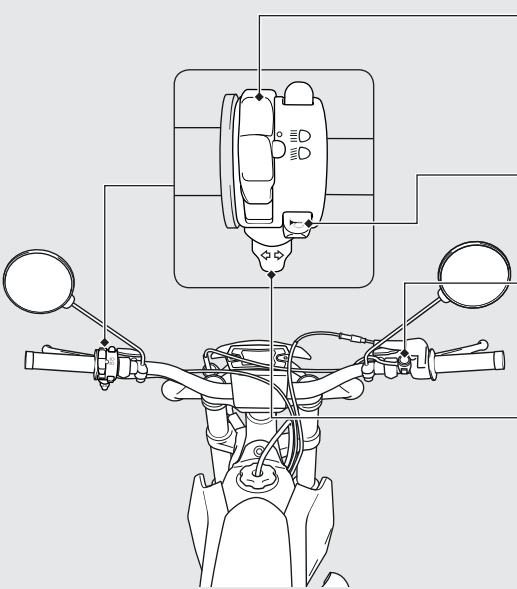

Headlight dimmer switch
- : High beam
- : Low beam

Horn button

Engine stop button
Keep pressed to stop the engine.

Right / left turn indicator switch

Steering lock

Locks the steering when parked to prevent possible theft of the motorcycle.

The use of a "U"-type anti-theft device for the wheel or other similar device is also recommended.

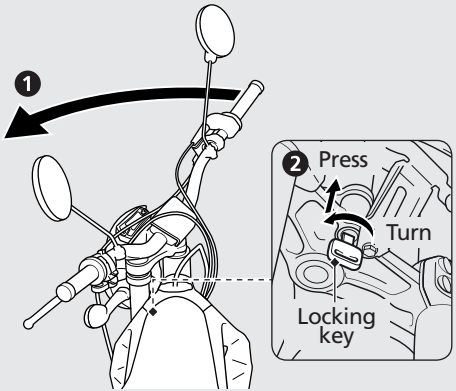

The steering lock is on the lower bridge of the front suspension.

Locking

1. Turn the handlebars all the way to the left.
2. Insert the key in the steering lock and turn it as far as it will go to the left.
   Then press the lock all the way in and turn the key back to the original position.
   - u Move the handlebars a little if it is difficult to lock.
3. Remove the key.

Unlocking

To unlock the steering, perform the locking sequence in the reverse order.

Starting the engine

Your 4Ride exhaust contains poisonous carbon monoxide gas. High levels of carbon monoxide can collect rapidly in enclosed areas such as a garage. Do not run the engine with the garage door closed. Even with the door open, run the engine only long enough to move your 4Ride out of the garage.

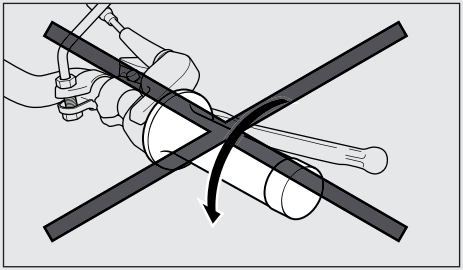

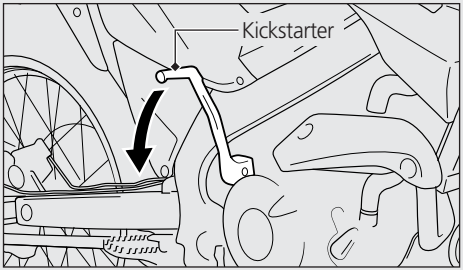

Cold engine starting

1. Shift the transmission into neutral.
2. Raise the side stand.
3. With the throttle fully closed, operate the kickstarter. Starting from the top of the kickstarter stroke, kick through to the bottom with a rapid, continuous motion.
4. After the engine starts, run it for a few minutes, "blipping" the throttle, until it warms up enough to idle.

If the engine does not start (P83)

Gear shift

The transmission of your motorcycle has five gears, arranged so that first gear is below and the other four are above.

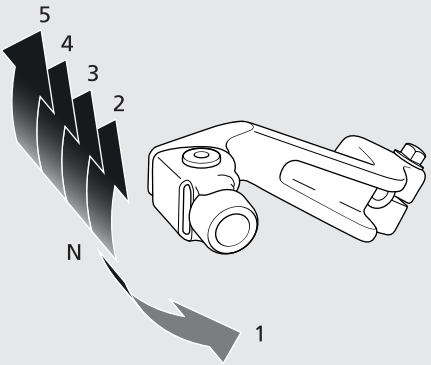

Refuelling

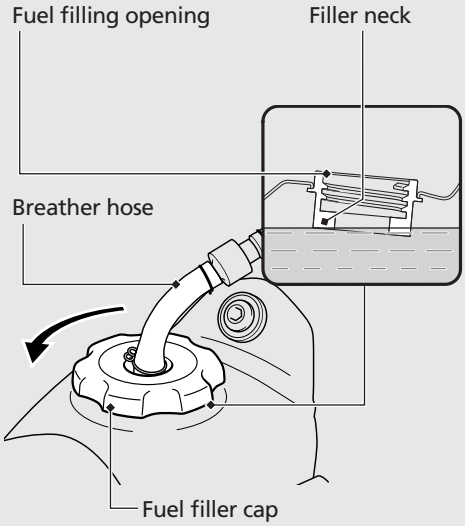

Fuel

Do not fill with fuel above the filler neck.
Type of fuel: Only unleaded petrol
Octane number: Your motorcycle has been designed to use fuel with an octane number (RON) of at least 95.
Tank capacity: 4.0 ± 0.2 litres
(1.05 US gal, 0.87 Imp. gal)

Refuelling *(continued)*

Refuelling and tips on fuel (P14)

Fuel filler cap opening
Disconnect the breather hose from the fuel filler cap.
Turn the fuel filler cap counterclockwise, then remove the cap.

Closing the fuel filler cap
Install the fuel filler cap by turning it clockwise.
Connect the breather hose to the fuel filler cap.

2 WARNING

Petrol is highly flammable and is explosive.
You can be burned or seriously injured when refuelling.

- Stop engine and keep heat, sparks, and flames away.
- Refuel only outdoors.
- Wipe up spills immediately.

NOTICE Always refuel enough petrol for the trip planned.

Suspensions

Front suspension settings

NOTICE The motorcycle is shipped with a light coating of grease on the forks. This is not an indication of a leak.

The fork should always be adjusted for the rider's weight and track conditions by using one or more of the following methods.

Basically, there are two adjustments you can make to the front suspension:

Rebound damping (right fork)
Turning the rebound damping adjuster adjusts how quickly the fork extends.

STD: 16 clicks from full hard.

Spring pre-load (left fork)
Turning the spring pre-load adjuster adjusts the spring initial pre-load length.

STD: 4 turns out from full soft

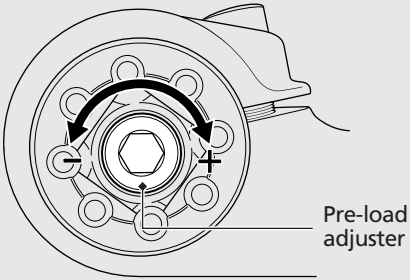

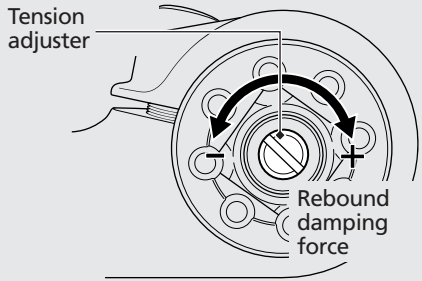

Suspensions *(continued)*

Rebound damping adjuster

Rebound damping:
Turning the rebound damping screw adjusts how quickly the shock absorber extends.

STD: 10 clicks from full hard.

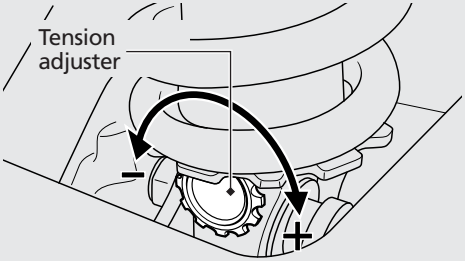

- When your Cota is new, your suspension will break-in as you ride.
- After break-in is completed, test ride your Cota with the rear suspension at the standard setting before attempting any adjustments.
- Make all rebound damping adjustment in one-click increments. Adjusting two or more clicks at a time may cause you to pass over the best adjustment. Test ride after each adjustment.
- If you become confused about adjustment settings, return to the standard position and start over.

Storage equipment

Document bag

The document bag is located in the storage box under the seat

- Remove the seat. (P53)

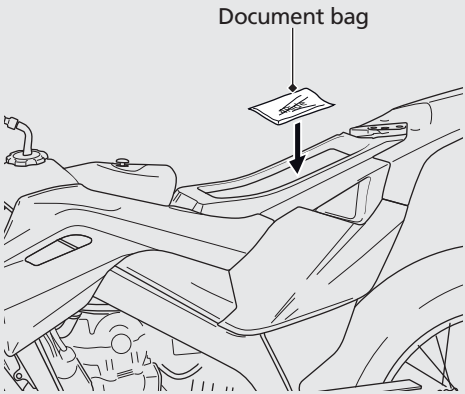

Maintenance

Read the “Importance of maintenance” and “Basic maintenance” sections before carrying out any maintenance task.
Consult "Specifications" to obtain service data.

Importance of maintenance ..... P. 38
Maintenance schedule ..... P. 39
Basic maintenance ..... P. 43
Component removal / installation ..... P. 53
Engine oil ..... P. 57
Transmission Oil ..... P. 62
Coolant ..... P. 64
Brakes ..... P. 66
Side stand ..... P. 68
Drive chain ..... P. 69
Wheels ..... P. 74
Clutch and brake ..... P. 75
Throttle ..... P. 78
Crankcase breather ..... P. 80
Headlight ..... P. 81

Importance of maintenance

It is absolutely essential to carry out proper maintenance on the motorcycle in order to ensure its safety, protect your investment, obtain maximum performance, prevent malfunctions and reduce pollution. The owner is responsible for maintenance. Make sure to inspect the motorcycle before each time you ride, and carry out the regular checks specified in the Maintenance schedule.
2 P. 39

2 WARNING

If you do not provide proper maintenance for your motorcycle or do not correct a problem before riding, you could have an accident that could result in serious injuries or even death.

Always follow the inspection and maintenance recommendations and the schedules indicated in this owner's manual.

Maintenance safety

Always read all the maintenance instructions before beginning work and make sure that you have the proper tools and parts, as well as the necessary technical skills. It is impossible to warn about all the conceivable hazards that might arise when carrying out maintenance procedures. Only you can decide whether or not you should carry out a task. Follow these instructions when performing maintenance.

- Shut off the engine.
- Park the motorcycle on a firm, level surface, using the side stand or a maintenance stand that supports the vehicle.
- Allow the engine, silencer, brakes and other hot parts to cool before servicing your motorcycle; otherwise, you could suffer burns.
- Only start the engine when indicated and in a well-ventilated area.

Maintenance schedule

The Maintenance schedule specifies the necessary maintenance requirements to ensure safe, reliable performance, as well as proper emissions control.

Maintenance work must be performed in accordance with the standards and specifications of Montesa by properly trained and qualified technicians.
Your Montesa dealer meets all of these requirements. Keep a maintenance record to ensure that the motorcycle receives proper maintenance. Make sure whoever performs the maintenance completes this record.

Any scheduled maintenance is considered to be a normal operating cost for the owner, who will be charged for it by the dealer.
Save all receipts.
If you sell your motorcycle, these receipts must be provided to the new owner, together with the motorcycle.

Montesa recommends that your dealer should road test your motorcycle after each periodic maintenance is carried out.

ITEM \ FREQUENCY		Pre-ride check	500 Km.	1.500 Km.	3.000 Km.	4.500 Km.	6.000 Km.	Every 6 months	Yearly check	Every 2 years	Remarks	Page
Fuel level		I									Make sure that you have enough fuel for the trip planned.	32
Throttle operation	🔧	I	I	I	I	I	I		I			78
Engine oil		I	R	R	R	R	R		R			45
Engine oil filter	🔧		R	R	R	R	R		R			57
Transmission Oil			R	R	R	R	R		R			62
Drive Chain		I	I	I	I	I	I				Check the item after riding in adverse conditions and dusty areas.	69
Brake Fluid		I	I	I	I	I	I		I	R		66
Brake Pad Wear		I	I	I	I	I	I					67
Clutch system		I	I	I	I	I	I		I			75
Wheels / tyres	🔧	I	I	I	I	I	I		I			48/74
Side stand		I	I	I	I	I	I		I		Check the item after riding in adverse conditions and dusty areas.	68
Lights / horn		I	I	I	I	I	I		I			-
Engine stop switch		I	I	I	I	I	I					-
Fuel Line	🔧		I	I	I	I	I		I			-
Fuel filter	🔧								I			-
Clean under the front suspension fender								I				-
Air cleaner	🔧		C	R	R	R	R				Check the air cleaner after riding in dusty areas.	51

ITEM / FREQUENCY		Pre-ride check	500 Km.	1.500 Km.	3.000 Km.	4.500 Km.	6.000 Km.	Every 6 months	Yearly check	Every 2 years	Remarks	Page
Spark Plug					I		R					-
Valve clearance			I		I		I					-
Crankcase breather				C	C	C	C		C			80
Engine oil filter screen			C	C	C	C	C					59
Engine idle speed			I	I	I	I	I		I			-
Radiator coolant			I	I	I	I	I		I	R		64
Cooling system			I	I	I	I	I		I			-
Drive chain slider / tensioner			I	I	I	I	I				Check the item after riding in adverse conditions and dusty areas.	73
Drive / driven sprocket			I	I	I	I	I					46
Drive chain slider			I	I	I	I	I					-
Brake system			I	I	I	I	I		I			-
Clutch fluid			I	I	I	I	I		I	R		107
Rear suspension			I	I	I	I	I		I		Check the items more often when riding in adverse conditions and dusty areas.	-
Damper linkage / rods			I	I	I	I	I		I			-
Fork oil										R		-
Steering pipe bearing			I	I	I	I	I		I			-
Wheel bearings					R		R					-
Nuts, bolts and fasteners			I	I	I	I	I		I			-

continued

Maintenance level

: Intermediate.
We recommend that the service be performed by your dealer, unless you have the necessary tools and technical capacities. The procedures are included in an official Montesa Shop Manual.

: Technical.
In the interest of safety, have your motorcycle serviced by your dealer.

Maintenance legend

I : Inspect (clean, adjust, lubricate or replace, if necessary)

R : Replace

C : Clean

Notes:

*1 : At higher odometer readings, repeat the maintenance work at the frequency intervals established here.

*2 : Service more frequently when riding in wet or dusty areas.

*3 : Service more frequently when riding in rain or with the throttle fully open.

*4 : Perform maintenance more frequently when riding off-road.

*5 : Replacement requires mechanical knowledge.

Pre-ride inspection

To ensure your safety, it is your responsibility as the rider to inspect your motorcycle before riding and make sure that any problem that you might find is solved. It is essential to carry out a pre-ride inspection, not only for safety reasons, but also because any malfunction, even if it is only a flat tyre, can pose serious problems.

Check the following items before riding the motorcycle.

- Fuel level
  - u Fill the tank when necessary. 2 P. 32
- Throttle
  - u Check for smooth opening and full closing in all steering positions. 2 P. 78
- Engine oil level
  - u Add oil to the engine, if necessary. Check for leaks. 2 P. 57
- Coolant level
  - u Add coolant, if necessary. Check for leaks. 2 P. 64
- Drive chain
  - u Check the condition and the slack, adjusting and lubricating it, if necessary. 2 P. 69
- Front brake
  - u Check the operation of the front and rear brakes: check the brake fluid level and the wear of the brake pads. 2 P. 66, 67
- Lights and horn
  - u Check that the lights, turn signals and horn work properly.
- Engine stop switch
  - u Check that it works properly.
- Clutch
  - u Check the operation; adjust the free play, if necessary. 2 P. 75
- Wheels and tyres
  - u Check the condition and the inflation pressure, adjusting it if necessary. 2 P. 48

Before riding off-road, check all of the points above, as well as the following:

- Make sure the spokes are tight. Check the rims for damage. 2 P. 74
- Make sure the fuel filler cap is tight. 2 P. 33
- Check for loose cables or other parts and anything else that seems out of the ordinary.
- Use a key to check that all the accessible nuts, bolts and fasteners are tight.

Part replacement

Always use original Montesa parts or their equivalents to ensure the reliability and safety of the vehicle.

2 WARNING

The installation of parts other than Montesa parts may render you motorcycle unsafe and cause an accident in which you may be seriously injured or even killed.

Always use original Montesa parts or equivalents that have been designed and approved for your motorcycle.

Engine oil

Oil consumption varies and its quality deteriorates over time, according to riding conditions. Regularly check the engine oil level and refill if necessary with the recommended oil. Old or dirty oil must be changed as soon as possible.

Selecting engine oil

Consult the "Specifications" section to find out which oil is recommended for your engine.
2 P. 107

Check the label to ensure that the oil meets all the following standards:

- Standard JASO T 903*1: MA
- Standard SAE*2: 10W-30
- API Classification*3: SG or better

*1. Standard JASO T 903 is a reference for 4-speed motorcycle engine oils. There are two classes: MA and MB. For example, the following label indicates the classification MA.

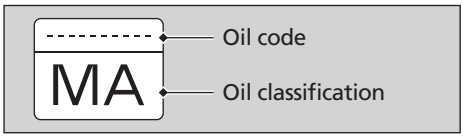

*2. Standard SAE classifies oils according to their viscosity.

*3. The API classification specifies the quality and performance of engine oils. Use SG grade or better oils, except for those labelled as "Energy Conserving" in the circular API service symbol.

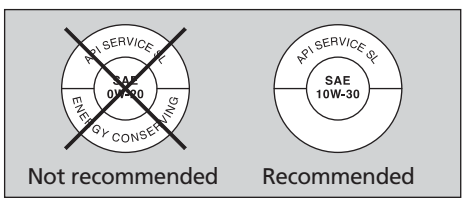

continued

Brake Fluid

Do not add or replace brake fluid, except for in the case of an emergency. Only use new brake fluid from a sealed container. If you add fluid, have your dealer inspect the brake system as soon as possible.

NOTICE

Brake fluid can damage plastic and painted surfaces.
Clean any spills immediately and carefully wash the affected area.

Recommended brake fluid:
DOT 4 brake fluid

Drive chain

The drive chain must be inspected and lubricated on a regular basis. Inspect the chain more often if you ride on roads in poor condition, at high speeds, in dusty areas, areas with water and mud or with repeated accelerations.

If the chain does not move smoothly, makes strange noises, has damaged rollers or loose pins, have it inspected by your dealer.

Also inspect the engine and rear wheel sprockets. If either of them has worn or damaged teeth, have your dealer replace them.

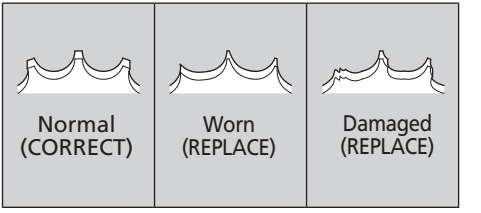

NOTICE

The use of a new chain with worn sprockets will cause the chain to quickly become worn.

Cleaning and lubrication

After inspecting the assembly, clean the chain and sprockets while turning the rear wheel. Use a dry cloth with chain cleaner or a neutral detergent. Use a soft brush if the chain is dirty. After cleaning, remove any remaining dirt and lubricate with the recommended product. If it is not available, use SAE 80 or 90 gear oil.

Recommended lubricant:
Transmission chain lubricant specifically designed for chains.

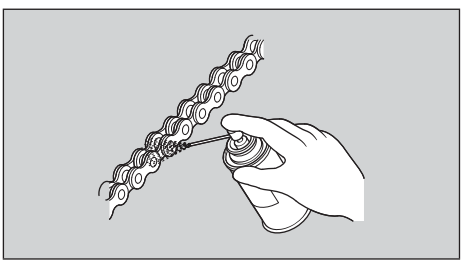

Avoid contact between the lubricant and brakes or tyres.
Avoid applying an excessive amount of chain lubricant to prevent it from splashing it on your clothes or the motorcycle itself.

Recommended coolant

The motorcycle engine is water-cooled. In order to provide adequate cooling, it is essential for the radiator be filled with coolant up the proper level.
2 P. 64
Pre-mixed solution of antifreeze and distilled water.

Concentration:
50% antifreeze and 50% distilled water

A concentration of antifreeze below 40% will not provide sufficient protection against corrosion and low temperatures.

A concentration of up to 60% will provide greater protection in cold climates.

NOTICE

The use of coolants not specified for aluminium engines or tap water can cause corrosion.

Tyres (inspection / replacement)

Checking the tyre pressure

Visually inspect the tyres and use a pressure gauge to check the air pressure before riding off-road and every time you return to the asphalt after off-road riding. If you only ride on asphalted surfaces, check the pressure at least once a month or whenever it seems like the tyres are a little flat. Always check the pressure when the tyres are cold.
If you decide to adjust the tyre pressure for a specific off-road riding situation, make the changes little by little.

Inspecting damage

Check for cuts, slits or cracks that expose the cords or fabric, as well as for nails or other foreign objects embedded in the side of the tyre or in the tread. Also inspect any possible bulges or protrusions in the side walls of the tyres.

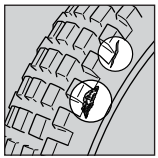

Checking for abnormal wear

Inspect the tyres, looking for signs of abnormal wear on the contact surface.

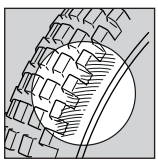

Inspecting the depth of the tread

Inspect the tread wear. For safe riding, the tyres should be replaced when the tread reaches a minimum depth of 3.0 mm.

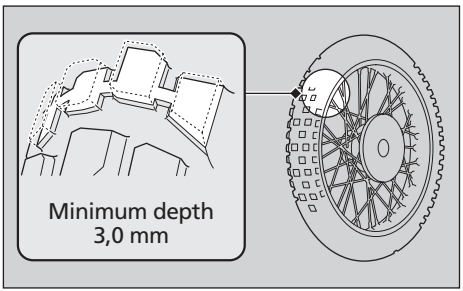

2 WARNING

Riding with tyres that are excessively worn or incorrectly inflated may cause an accident in which you could suffer serious injuries or even be killed.

Follow all instructions in this owner's manual regarding tyre inflation and maintenance.

continued

Replace the tyres at your dealer.
To find out the recommended tyres, their pressure and the minimum tread depth, consult the "Specifications" section. 2 P. 107
Always follow these instructions when changing tyres.

- Use the recommended tyres or equivalents of the same size, construction, speed rating and load capacity.
- Remember to replace the inner tube whenever you replace a tyre. An old inner tube will probably have stretched and could fail if installed in a new tyre.

2 WARNING

The installation of unsuitable tyres on your motorcycle can affect riding and stability, which could result in an accident resulting in serious injuries or even death.

Always use tyres of the size and type recommended in this owner's manual.

Air cleaner

Disassembly

Remove the seat box-rear fender assy. 2 P. 56

1. Remove the four bolts and air cleaner housing cover.
2. Remove the air cleaner element assembly from the air cleaner housing.
3. Remove the mesh device from the air cleaner element.
   - u Check the mesh device for damage and replace it if necessary.
   - u Thoroughly wash the air cleaner element in clean non-flammable cleaning solvent, then wash in a solution of hot water and liquid dish-washing soap. Apply special air cleaner oil or engine oil to the element and remove the excess oil.
   - u Clean the inside of the air cleaner housing.

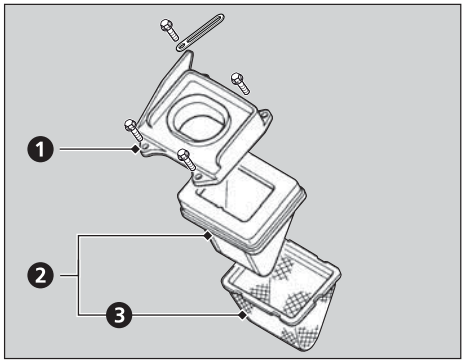

2 WARNING

Never use petrol or low flash point solvents to clean the air cleaner element. A fire or explosion could result.

Soak the element in a special air cleaner or engine oil and drain out the excess.

NOTICE

Do not twist the element to squeeze out the excess oil. Failure to follow this precaution can result in a damaged element.

Installation is in the reverse order of removal.

Seat

Removal

1. Pull on the ring on the seat lock located on the right side, at the rear of the seat.
2. Pull the seat back until it is no longer anchored to the guide pin located on the fuel tank. Lift the seat.

Installation

1. Align the anchor on the inner front part of the seat with the guide pin located on top of the fuel tank.
2. Pressing on the front of the seat, slide it forward while at the same time pressing on the rear over the lock.
3. Make sure that the seat is firmly locked in the correct position.

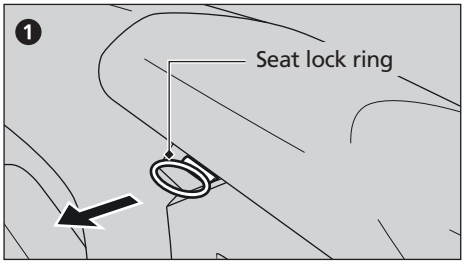

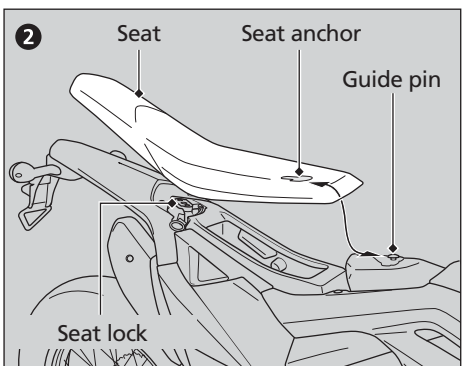

continued

Front right / left cover

Removal

1. Remove the seat. 2 P. 53
2. Remove the bolt from the inside of the top front part (fuel tank).
3. Remove the bolt from the inside of the lower front part (frame support).
4. Remove the bolt from the top.
5. Remove the rear screws of the front covers inside the seat box.
6. Remove the front cover.

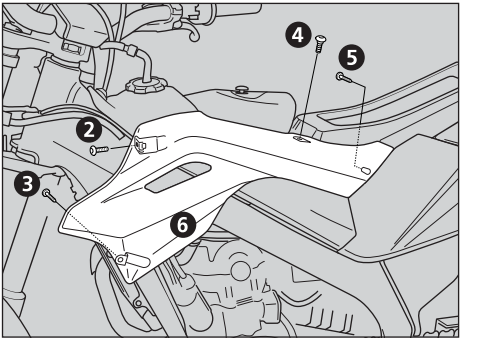

Installation

Install the parts in the reverse order of removal.

Right / left side cover

Removal

1. Remove the seat. 2 P. 53
2. Remove the bolt located inside the housing.
3. Remove the lower centre pivot bolt on the fastening ring.
4. Remove the side cover, detaching the front and rear tabs.

Installation

1. Insert the front tab in its slot, followed by the rear tab.
2. Press the centre safety pivot bolt until it clicks in place.
3. Insert the bolt through the inside of the housing.

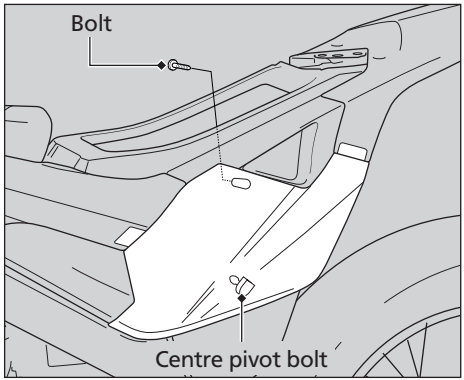

Seat box- rear fender assy

1. Remove the seat. 2 P. 53
2. Remove the right / left side covers. 2 P. 55
3. Remove the top bolts from the front covers.
4. Remove the rear screws of the front covers inside the seat box.
5. Remove the front relay support bolts.
6. Remove the rear bolts, washers and bearings fastening the seat box onto the filter box supports.

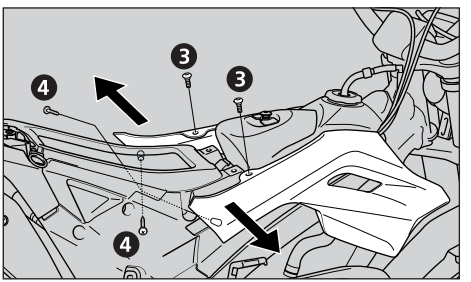

7. Remove the screw on the right lower side cover.
8. Take off the front covers and gently lift out the seat box- rear fender assy.
   - u Disconnect the electrical installation.
9. Remove the seat box- rear fender assy.

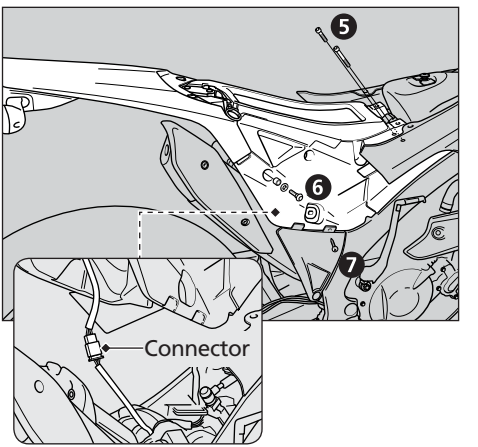

Checking the engine oil

1. Start the engine and let it idle for around 3 minutes.
2. Stop the engine and wait 3 minutes.
3. Support the motorcycle in an upright position on level surface.
4. Remove the oil filler cap / dipstick and wipe the oil with a clean cloth.
5. Insert the dipstick without screwing it in, remove it and check the oil level.

If the oil level is below or near the lower level line on the dipstick, add the recommended engine oil to the upper level line through the oil filler hole.
2 P. 58

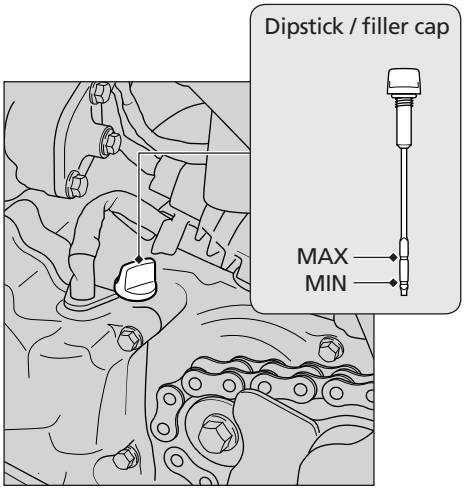

Adding engine oil

If the engine oil is below or near the lower level 2 P. 57, add the recommended engine oil. 2 P. 107

1. Remove the oil filler cap.
Add the recommended oil until it reaches the upper level mark.
- u Place the motorcycle in an upright position on a firm, level surface when checking the oil level.
- u Do not fill above the upper level mark.
- u Make sure no foreign bodies enter the oil filler opening.
- u Clean up any spills immediately.

2. Firmly replace the oil filler cap.

NOTICE

Excessive or insufficient amounts of oil can damage the engine. Do not mix different brands or weights of oil. They could affect engine lubrication.

To find out the recommended oil and indications for selecting oil, consult the "Basic maintenance" section. 2 P. 45

Changing the engine oil and filter

Special tools are required to change the oil and filter. It is recommended for the motorcycle to be serviced by the dealer.

Use a Montesa genuine oil filter or equivalent specified for your model.

NOTICE

Using the wrong oil filter could cause serious damage to the engine.

1. Change the engine oil with the engine warm.
2. Park on a firm, level surface and lower the side stand.
3. Remove the bolts and engine skid plate.
4. Remove the oil filler cap / dipstick.
5. Place a drainage container under the drain bolt.
6. Remove the drain bolt and sealing washer to drain the oil.
7. Remove the drive sprocket cover.
8. Remove the left crankcase cover and the cover seal.
9. Dispose of the oil and oil filter at an approved recycling centre.
10. Remove the bolt, the mounting plate and the oil and filter cover.
11. Remove the oil filter cover and O-rings.
12. Remove the oil filter and spring.
13. Apply grease to the end of the oil filter spring. Install the spring on the new oil filter.

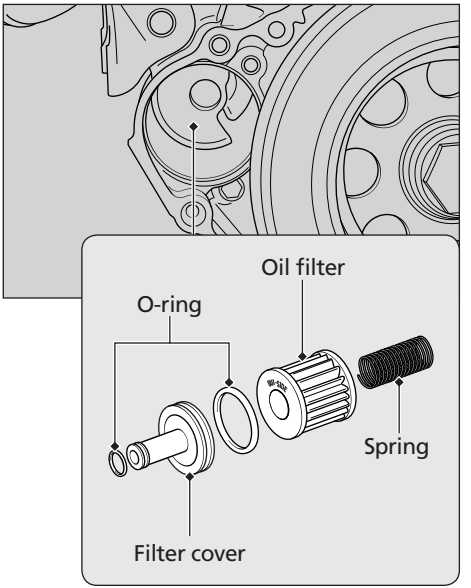

14. Install the new oil filter inside the crankcase, with its "OUT SIDE" mark facing out.

2 WARNING

Installing the oil filter backwards can result in severe engine damage.

15. Install new O-rings in the oil filter cover grooves.

16. Install the oil filter cover in the left crankcase, aligning the centre of the cover with the hole in the oil filter.
Make sure that the oil filter cover seats properly in the crankcase.

17. Install the retaining plate and tighten the bolt securely.

18. Remove the sieve filter, clean it and reinstall it.

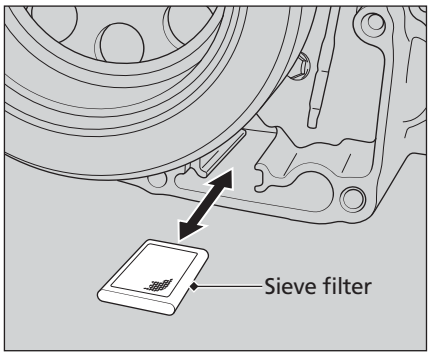

19. Install a new O-ring in the crankcase for the left crankcase cover.
20. Assemble the left crankcase cover on the engine crankcase and fasten it with its corresponding bolts.
21. Install the drive sprocket cover.
22. Install a new sealing washer on the drain bolt. Tighten the drain bolt.

Torque: 22 N•m (2,2 kgf•m).

23. Fill the engine crankcase with the recommended oil (2 P. 45) and replace the oil filler cap.
24. Check the oil level. 2 P. 57
25. Start the motorcycle and make sure there are no oil leaks.
26. Install the engine cover plate.

Changing the oil

1. Warm up the engine before draining the oil.
   - u This will ensure complete and rapid draining.
   - u Remove the bolts and crankcase skid plate.
2. Support the motorcycle in an upright position on level surface.
3. Remove the oil filler cap from the clutch cover.
4. Place an oil drain pan under the engine to catch the oil, then remove the drain bolt and sealing washer from the left crankcase.

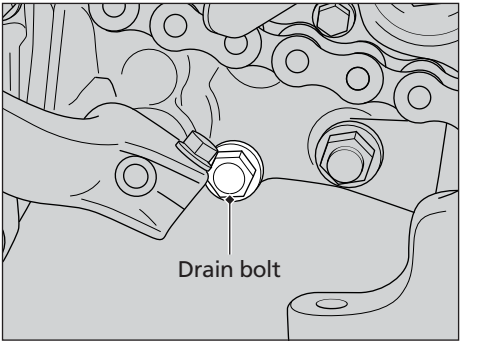

5. After the oil has drained completely, install the drain bolt with a new sealing washer. Tighten the drain bolt to the specified torque.

Torque: 22 N•m (2,2 kgf•m).

6. Pour specified transmission oil.

Specified transmission oil:
REPSOL MOTO TRANSMISSION (75W)
ELF HTX740 (75W)

Capacity:
after draining
0.50 litre (0.53 US qt, 0.44 Imp qt)
after disassembly
0.57 litre (0.60 US qt, 0.50 Imp qt)

Check the O-ring is in good condition, install the oil filler cap.

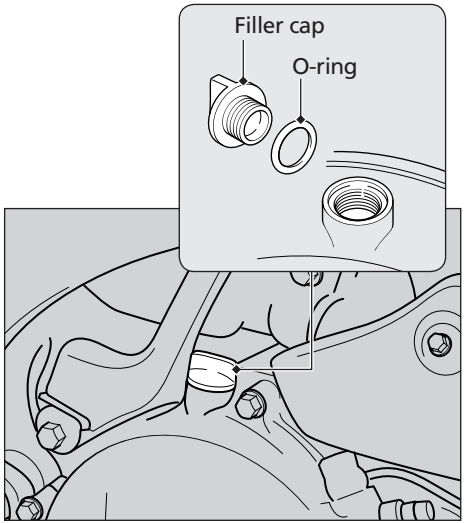

Checking the coolant

Always make sure that the engine and the radiator have cooled before checking the coolant level.

1. Position the motorcycle on a firm, level surface.
2. Remove the upper radiator mounting bolt.
3. Move the upper part of the radiator forward and remove the radiator cap.
4. Check that the coolant level reaches the neck of the filler hole.

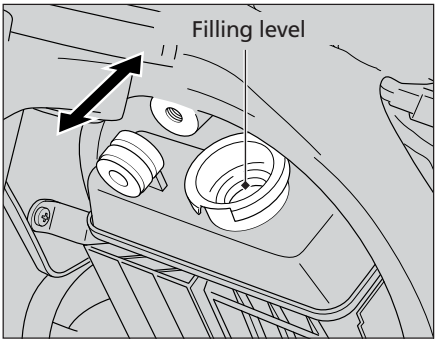

If the coolant level drops noticeably, it is likely that there is a serious leak. Have your dealer inspect the motorcycle.

Adding coolant

1. If the coolant level drops below the neck of the filler hole, add the recommended coolant (2 P. 47) until the level reaches the neck of the filler hole.
2. Remove the upper radiator mounting bolt.
3. Move the upper part of the radiator forward and remove the radiator cap.
   - u Fill until the level reaches the neck of the filler hole.
   - u Make sure no foreign bodies enter the radiator during the filling procedure.

2 WARNING

Removing the radiator cap while the engine is hot will allow the coolant to spray out, seriously scalding you.

Always let the engine and radiator cool down before removing the radiator cap.

Changing the coolant

Unless you have the proper tools and necessary mechanical skills, have your dealer change the coolant.

Checking the brake fluid

1. Place the motorcycle in an upright position on a firm, level surface.
2. Front
   Make sure that the brake fluid reservoir cap is in a horizontal position and that the fluid level is above the minimum level mark (MIN).
   Rear
   Make sure that the brake fluid reservoir is in a horizontal position and that the fluid level is between the MIN and MAX level marks.

If the brake fluid level in the brake fluid reservoirs is below the MIN level mark or there is too much free play of the brake lever or pedal, inspect the brake pads for wear. If they are not worn, a leak is likely. Have your dealer inspect the motorcycle.

Recommended brake fluid: DOT 4

Front

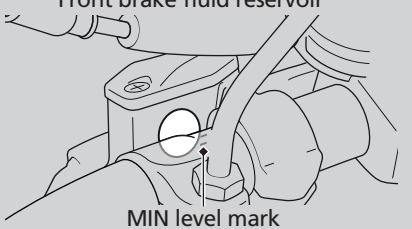

Rear

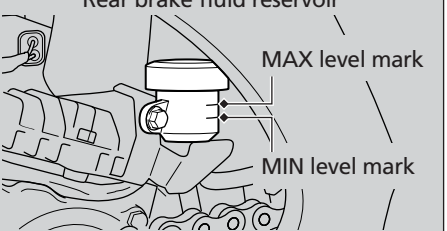

Inspecting the brake pads

Check the brake pads for wear.
The pads must be replaced if one of the pads is worn.
A pad is considered to be worn if it has a minimum thickness of 0.5 mm on the front brake and 1.0 mm on the rear brake.

1. Front
   Inspect the brake pads from the top of the brake caliper.
2. Rear
   Inspect the brake pads from the rear right side of the motorcycle.

If necessary, have your dealer replace the brake pads. Always replace the left and right brake pads at the same time.

Front

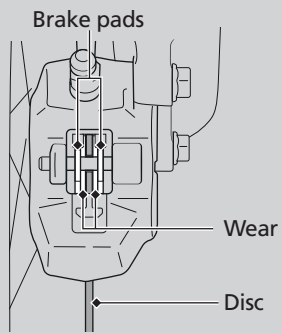

Rear

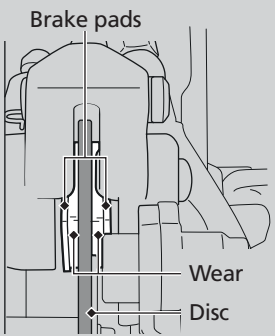

Side stand

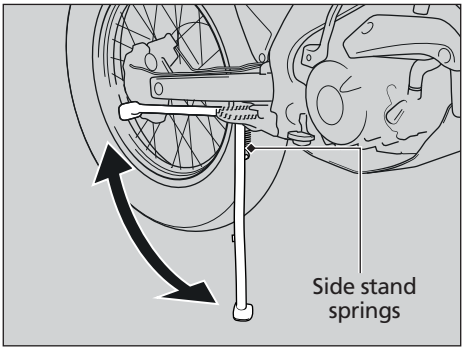

The stand is located on the right side of the motorcycle. It is used to support the motorcycle when it is parked. To activate it, use your foot to lower the stand until it is fully extended.

1. Check the stand springs for damage or loss of tension.
2. Make sure that the stand assembly moves freely.

If the stand is stiff or squeaks, clean the area around the pivot and lubricate the pivot bolt with grease or oil lubricant.

NOTICE

Do not start the motorcycle while supported on the side stand, which could be bent.

Drive chain tension inspection

Check the drive chain tension at various points on the chain. If it is not consistent at all points, some links may be kinked or have seized.
Have your dealer inspect the chain.

1. Place the motorcycle on its side stand on level ground.
2. Turn off the engine. Shift the transmission into neutral.
3. Check the tension on the lower half of the drive chain, halfway between the engine sprocket and the rear wheel sprocket.

Drive chain slack:
25 to 35 mm

u Do not ride the motorcycle if the slack is greater than 50 mm.

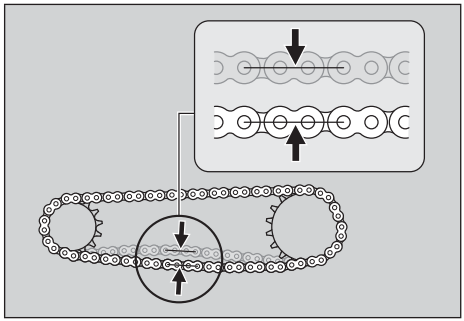

4. Move the motorcycle forward and check that the chain moves smoothly.
5. Inspect the engine and rear wheel sprockets. 2 P. 46
6. Clean and lubricate the drive chain. 2 P. 47

Drive chain slack adjustment

Adjustment of the drive chain requires the use of special tools. If you do not have the necessary means, have your dealer adjust your drive chain tension.

1. Place the motorcycle on its side stand on level ground.
2. Turn off the engine. Shift the transmission into neutral.
3. Loosen the rear axle nut just enough to move the rear wheel back.
4. Turn the eccentric chain adjuster equally on both sides until the correct drive chain tension is obtained.

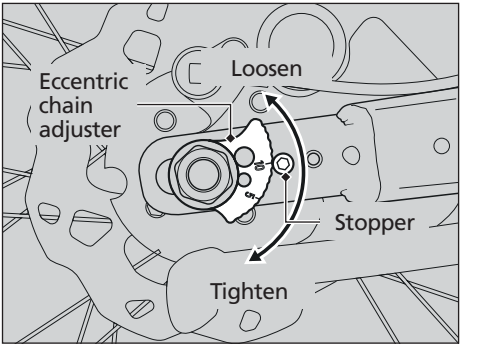

5. Turn the eccentric chain adjuster to a position with a larger number to reduce the free play of the chain or towards a smaller number to increase it.
   - u Adjust the chain with the eccentric chain adjusters so that it is parallel with the centre line of the frame.
   - u Check that the stopper is between the teeth of the eccentric chain adjuster.
6. Recheck the drive chain tension and free wheel rotation.
7. After adjustment, tighten the axle nut to the specified torque.

Torque: 69 N•m (7.0 kgf•m)

8. Lubricate the drive chain.

continued

Checking the drive chain for wear

The chain is tightened using the eccentric chain adjusters. These have two different positions on the swingarm.
When it is necessary to set the eccentric chain adjuster to the maximum adjustment point (position 15) of the second position of the swingarm in order to tighten the chain, this means that the chain is excessively worn and must be replaced.

Chain: REGINA #520

If necessary, have your dealer replace the drive chain.

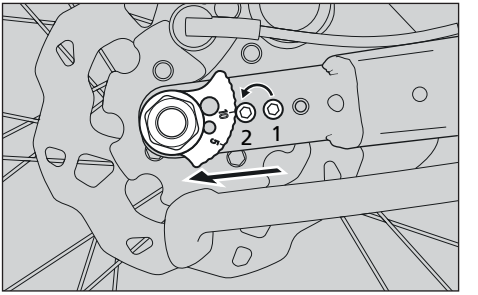

Checking the drive chain slider

1. Check the drive chain slider for wear or damage.
   - u If the wear is 2.0 mm (0.08 in) or more, replace the slider.
2. Check the drive chain tensioner slider for wear or damage.
   - u If the wear is 2.0 mm (0.08 in) or more, replace the slider.

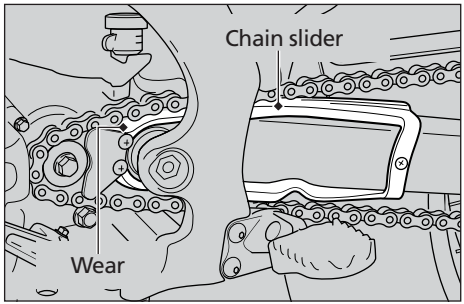

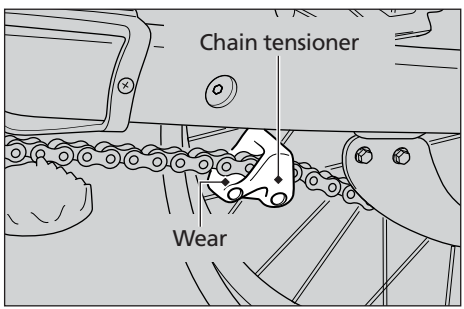

Rims and spokes

For the safe operation of the motorcycle, it is essential to maintain the circular shape of the wheels, as well as the proper tension of the spokes. During the first 500 km (600 miles), the spokes will loosen more rapidly due to the initial setting of parts. Excessively loose spokes may result in high speed instability and possible loss of control.
It is not necessary to remove the wheels to carry out the service recommended in the Maintenance schedule. However, information about removing the wheel is included for the case of an emergency.
2 P. 86

1. Inspect the rims and wheel spokes for any damage.
2. Tighten any loose spokes.
3. Turn the wheel slowly to see if it seems to wobble. If it does, the rim is no longer circular (round). If it wobbles noticeably, have it inspected by your dealer.

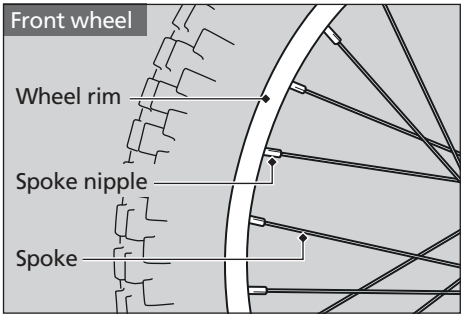

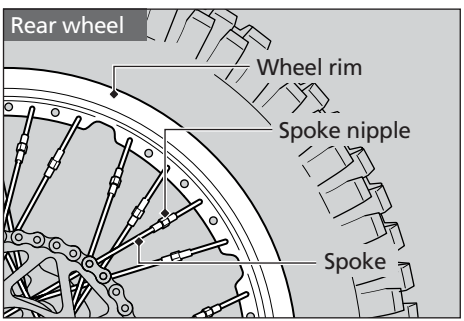

Checking the clutch and Front brake

Checking the free play of the clutch lever and the front brake lever

Check the free play of the clutch lever and the front brake lever.

Free play of the clutch lever and the front brake lever: 5 to 15 mm

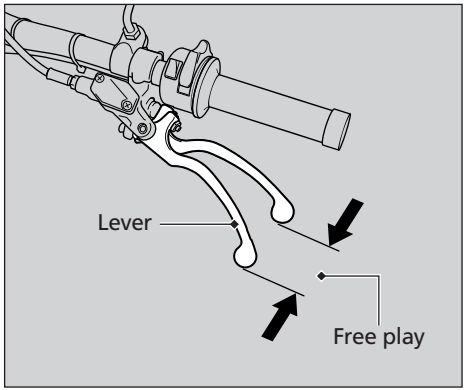

Check the clutch cable and the front brake cable for kinks or signs of wear. If necessary, have your dealer replace it.

Adjusting the free play of the clutch lever and the front brake lever

The clutch lever and the front brake lever free play can be adjusted by turning the adjuster.

- To reduce free play, turn the adjuster clockwise, then tighten the lock nut securely.

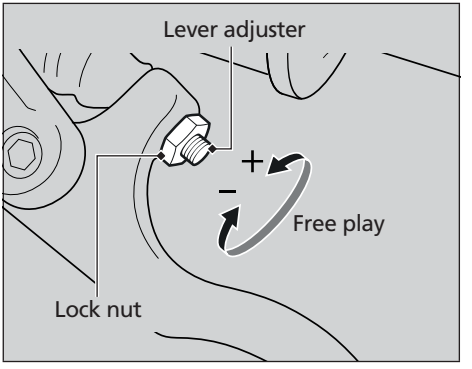

- To increase free play, turn the adjuster counterclockwise, then tighten the lock nut securely.

NOTICE

Do not adjust the free play of the lever to less than 5 mm.

Adjusting the free play of the rear brake pedal

Checking the brake pedal height

The brake pedal height can be adjusted to the ider's preference.

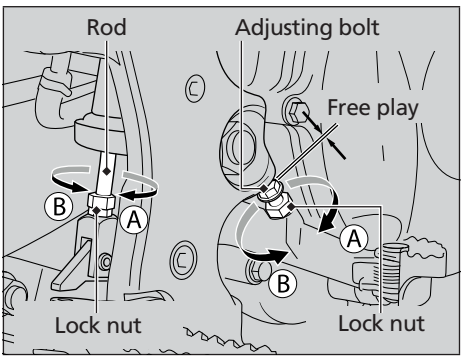

To adjust the rear brake pedal height:

1. Loosen the push rod lock nut and brake pedal adjusting bolt lock nut. Then turn the both adjusting bolts in direction "A" to raise the pedal, or in direction "B" to lower it.
2. Tighten the lock nuts at the desired pedal height.
3. After adjustment, check the brake pedal free play at the top of the pedal.

NOTICE

Make sure that the clearance between the front adjusting bolt and frame is at least 1~2 mm (0.04~0.08 in).

Checking the throttle

With the engine turned off, check that the throttle grip turns smoothly from a completely closed position to a completely open position in all steering positions and that the throttle free play is correct. If the throttle does not move smoothly, does not automatically close or if the cable is damaged, have your dealer inspect the motorcycle.

Throttle grip free play:
2 to 4 mm

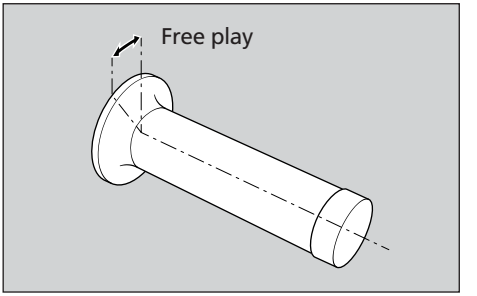

Adjusting the throttle free play

Adjustment is made with the throttle cable adjuster.

1. Slide the rubber dust cover off from the cable adjuster.
2. Loosen the lock nut.
3. Turn the adjuster.
   - u Turn the adjuster towards "A" to reduce the free play.
   - u Turn the adjuster towards "B" to increase the free play.
4. Tighten the lock nut after adjustment.

Operate the throttle grip to ensure that it functions smoothly and returns completely in all steering positions.

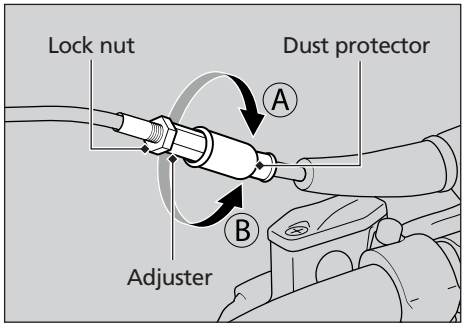

Cleaning the crankcase breather

Service more frequently when riding in rain or at full throttle. Service if the accumulated deposits can be seen in the transparent section of the breather.

1. Remove the breather tube from the crankcase.
2. Drain the reservoirs into an appropriate container.
3. Install the crankcase breather tube.

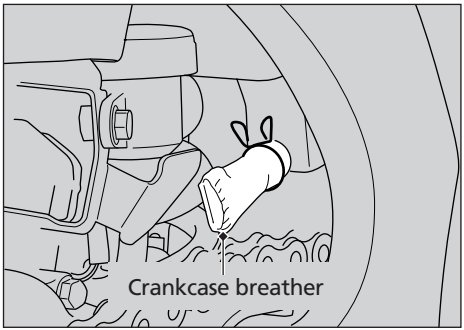

Adjusting the headlight aim

The vertical aim of the front headlight can be adjusted to obtain the proper alignment.
Bear in mind local laws and regulations.

1. Remove the three bolts fastening the headlight housing.
2. Adjust the alignment by moving the lower support of the headlight housing back and forth.
3. Tighten the lower bolt.
4. Tighten the two side bolts.

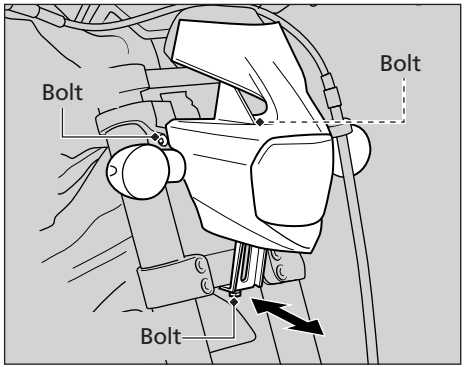

Locating malfunctions

Engine does not start ..... P. 83
Warning indicators on ..... P. 84
Flat tyres ..... P. 85
Electrical problems ..... P. 90

Engine does not start

Check the following points:

- Check the correct engine starting sequence.
  2 P. 30
- Check that there is petrol in the fuel tank.
- Make sure engine stop button is not pushed.
- Keep the throttle completely closed.

PGM-FI (Programmed Fuel Injection) Malfunction indicator lamp (MIL)

If the MIL indicator comes on while driving, you may have a problem with the PGM-FI electronic injection system.
Slow down and stop the motorcycle in a safe place. Re-start the motorcycle.
If the MIL indicator is still on after 5 seconds, inspect the motorcycle at your Montesa dealer as soon as possible.

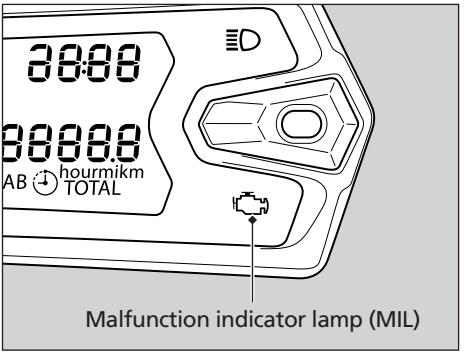

Repairing a flat tyre or changing a tyre requires special tools and technical experience. We recommend that this type of service be performed by your dealer.
After an emergency repair, have your tyre / wheel inspected by your dealer.

Tube repair and replacement

If you puncture a tyre or damage an inner tube, it must be replaced as soon as possible. A tube that is repaired may not have the same reliability as a new one, and it may fail while you are riding.
If you need to make a temporary repair by patching a tube or using an aerosol sealant, ride cautiously at reduced speed and replace the tube before you ride again.
The tyre must be carefully inspected as described every time the tube is replaced.

2 WARNING

It can be hazardous to ride the motorcycle with a temporary repair of the tyre or inner tube. If the temporary repair fails, you can have an accident in which you could be seriously hurt or even killed.

If you must ride with a tyre or inner tube that has been temporarily repaired, ride slowly and be careful not to exceed 50 km/h until the tyre is replaced.

Removing the wheels

Follow these procedures if you need to remove a wheel to repair a flat.

Front wheel

Removal

1. Park on a firm, level surface.
2. Loosen the axle pinch bolt.
3. Loosen the front axle.
4. While firmly supporting the motorcycle, lift the front wheel off the ground using a safety stand or lifting device.
5. Remove the front axle and the wheel.
   - u Avoid getting grease, oil or dirt on the surfaces of the discs or pads.
   - u Do not press the brake lever while the front wheel is off the motorcycle.

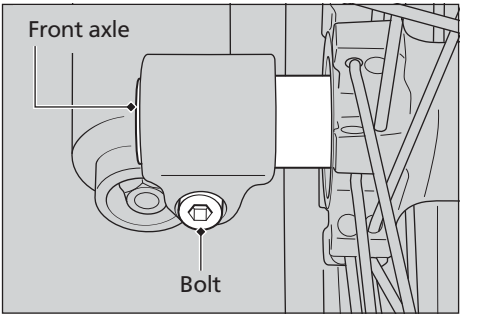

Installation

1. Position the wheel between the fork arms and insert the front axle through the right arm of the fork and the wheel hub.
   - u Avoid scratching the brake pads and position the brake disc carefully between the pads.
2. Apply pressure to the axle.

Torque: 70 N•m (7.0 kgf•m).

3. Lower the front wheel to the ground.
4. Press the brake lever several times. Then press on the fork several times.
5. Tighten the axle pinch bolt.

Torque: 21 N•m (2.1 kgf•m).

6. Lift the front wheel off the ground again and check that it turns without difficulty once the brake is released.
7. Lower the front wheel to the ground again.

If a torque wrench was not used for installation, see your dealer as soon as possible to verify proper assembly.
Improper assembly may lead to the loss of braking capability.

Rear wheel

Removal

1. While firmly supporting the motorcycle, lift the rear wheel off the ground using a safety stand or lifting device.
2. Loosen the nut on the rear axle and turn the eccentric chain adjusters to the "0" position so that the rear wheel can move completely forward for maximum free play of the drive chain.
3. Remove the rear axle nut.
4. Remove the drive chain from the sprocket of the rear wheel by pressing the wheel forward.
5. Remove the rear axle and the eccentric chain adjusters.

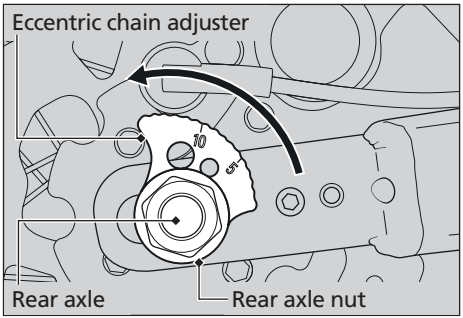

6. Remove the brake caliper support, the rear wheel and the side bearings.
   - u Support the brake caliper assembly so that the brake hose does not hang down. Do not twist the brake hose.
   - u Avoid getting grease, oil or dirt on the surfaces of the discs or pads.
   - u Do not press the brake pedal while the wheel is off the motorcycle.

Installation

1. To install the rear wheel, reverse the removal procedure.
u Prevent the brake caliper from scratching the wheel during installation.

NOTICE

When installing brake caliper in its correct position, carefully fit the brake disc between the brake pads to avoid damaging the pads.

2. Make sure that the groove supporting the brake caliper is positioned in the swingarm anchor.

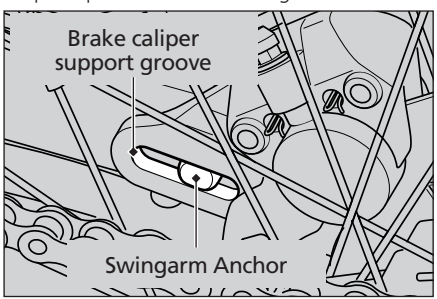

3. Adjust the drive chain. 2 P. 70

4. Insert and tighten the rear axle nut.

Torque: 70 N•m (7.0 kgf•m).

5. After installing the wheel, apply the brake pedal several times and then recheck the wheel, making sure it can rotate freely.
Recheck the wheels if the brake drags or if the wheels does not rotate freely.

If a torque wrench was not used for installation, see your dealer as soon as possible to verify proper assembly.
Improper assembly may lead to the loss of braking capability.

Burnt out bulb

Follow the procedure described below to replace a burnt out bulb.
Be sure to let the bulb cool down before replacing it.
Use only the specified bulbs.
Check that the bulb works properly before riding the motorcycle.
See the "Specifications" section to find out the correct wattage of the bulb. 2 P. 108

Headlight bulb

1. Remove the 3 bolts.
2. Remove the front headlight assembly.
3. Disconnect the terminals from the bulb.

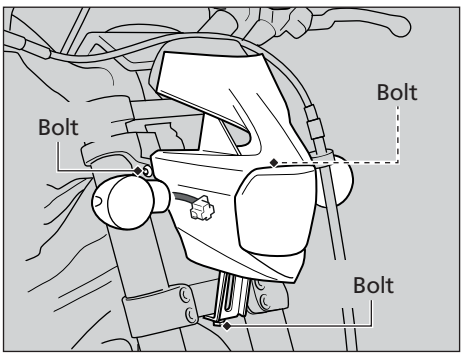

4. Remove the dust cover.
5. Press down on the pin and pull out the bulb without turning it.
6. Install a new bulb and the rest of the parts in the reverse order of removal.

Do not touch the glass surface with your fingers. If you touch the bulb with your bare hands, clean it with a cloth moistened with alcohol.

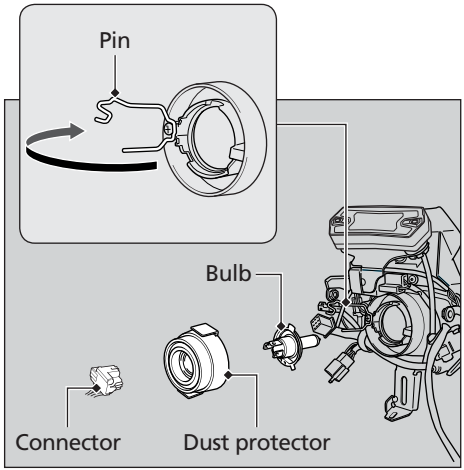

Position light bulb

1. Remove the socket without turning.
2. Pull out the bulb without turning.
3. Install a new bulb and the socket in the reverse order of removal.

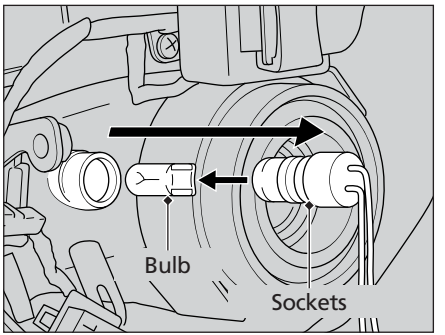

Front / rear turn signal bulb

1. Remove the bolt.
2. Remove the turn signal lens.
3. Remove the amber cover.
4. Slightly press the bulb and turn it counterclockwise.

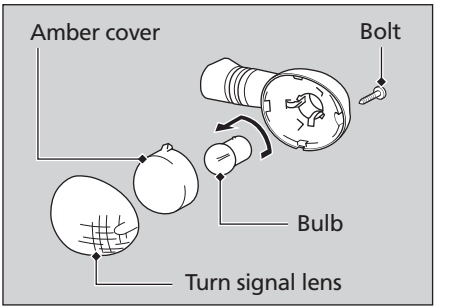

5. Install a new bulb and the rest of the parts in the reverse order of removal.

Registration plate light bulb

1. Remove the socket without turning.
2. Pull out the bulb without turning.
3. Install a new bulb and the socket in the reverse order of removal.

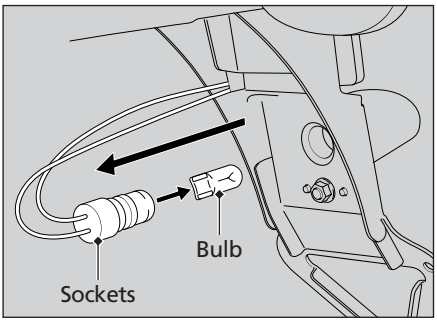

Information

Instruments, controls and other features . P. 93
Fuels containing alcohol ..... P. 94
Catalytic converter..... P. 95
Caring for your motorcycle..... P. 96
Storing your motorcycle ..... P. 99
Transporting your motorcycle ..... P. 100
You and the Environment..... P. 101
Serial numbers ..... P. 102

Instruments, controls and other features

Total odometer

The screen is reset to 0.0 once the reading exceeds 999.999.

Tripmeter

The Trip 1 and Trip 2 partial odometers are reset to 0.0 once the reading exceeds 999.9.

Ride time

The Trip 1 and Trip 2 partial ride time are reset to 0.0 once the reading exceeds 999.9.

Document bag

The owner's manual, as well as registration and insurance information, can be kept in the plastic document bag located under the seat. 2 P. 36

Ignition cut-off system

An angle sensor (bank angle) stops the engine and fuel pump after a few seconds in the event that the motorcycle tips over.

Fuels containing alcohol

In some countries, conventional fuels mixed with alcohol are available.
This motorcycle is designed only to be used with "unleaded" petrol, with a RON of 95 or higher.

The following fuel blends can be used in your motorcycle:

- (E5) Ethanol (ethyl alcohol) 5% by volume.
- (E10) Ethanol (ethyl alcohol) 10% by volume.

Catalytic converter

This motorcycle is equipped with a three-way catalytic converter. The catalytic converter contains precious metals that serve as catalysts in the high-temperature chemical reactions that convert the hydrocarbons (HC), carbon monoxide (CO) and nitrogen oxides (NOx) in the engine exhaust into safe compounds.

A defective catalytic converter contributes to air pollution, and can impair your engine's performance. A replacement unit must be an original Montesa part or its equivalent.

Follow these recommendations to protect your motorcycle's catalytic converter.

- Always use unleaded petrol. Petrol containing lead will damage the catalytic converter.
- Keep the engine in good operating condition.
- If you observe that your motorcycle engine experiences ignition malfunctions, sputters, stalls or otherwise does not operate properly, stop, turn off the engine and have the motorcycle inspected.

Caring for your motorcycle

Frequent cleaning and polishing are important to ensure the long life of your Montesa motorcycle. A clean motorcycle makes it easier to detect potential problems.
In particular, sea spray and salt used to prevent ice from accumulating on roads favour corrosion. Always thoroughly wash your motorcycle after riding on coastal or treated roads.

Washing your motorcycle

Allow the engine, silencer, brakes and other hot parts to cool before washing.

1. Rinse the motorcycle thoroughly with a hose to remove loose dirt.
2. If necessary, use a sponge or soft cloth to remove road dirt.
   - u Clean the front headlight lenses, panels and other plastic parts carefully to avoid scratching them. Avoid applying water directly to the air cleaner, the silencer or electrical parts.
3. Rinse the motorcycle with plenty of water and dry it with a clean, soft cloth.
4. After drying the motorcycle, lubricate the moving parts.
   - u Make sure that no lubricant is spilled on the brakes or tyres. The braking capacity of brake discs or pads contaminated with oil is greatly reduced, which can cause an accident.
5. Lubricate the drive chain immediately after washing and drying the motorcycle.

6. Apply a coat of wax to prevent corrosion.
- u Avoid products that contain harsh detergents or chemical solvents. These products can damage metal parts, as well as the paint and plastic on your motorcycle.
  Keep the wax away from tyres and brakes.
- u If your motorcycle has parts with matte paint, do not apply wax to the surfaces with matte paint.

Precautions during cleaning

Follow these indications during cleaning:
- Do not use high-pressure machines to clean your motorcycle.
  - u High-pressure water cleaners can damage moving and electrical parts, rendering them inoperable.
- Do not aim water directly at the silencer:
  - u Water in the muffler can prevent the motorcycle form starting and cause the silencer itself to rust.
- Dry the brakes:
  - u Water impairs braking effectiveness. After washing, intermittently apply the brakes at a slow speed to help dry them.
- Do not aim water under the seat:
  - u If water enters the compartment under the seat, it could damage documents and other belongings.
- Do not aim water at the air cleaner:
  - u If water enters the air cleaner, it can prevent the engine from starting.
- Do not aim water under the front headlight:
  - u Any condensation inside the front headlight should dissipate once the engine has been running for a few minutes.
- Do not use compounds containing wax on painted surfaces with a matte finish:
  - u Using plenty of water, clean painted surfaces with a matte finish with a soft cloth or a sponge. Dry with a soft, clean cloth.
  - u Use a neutral detergent to clean matte painted surfaces.

continued

Aluminium components

Aluminium corrodes when it comes in contact with dirt, mud or road salt.
Clean aluminium parts regularly, and follow these indications to prevent scratches:

- Do not use stiff brushes, steel wool or cleaners containing abrasives.

Panels

Follow these indications to prevent stains and scratches:

- Wash the panels carefully with a soft sponge and plenty of water.
- Use diluted soap to remove tough stains, and rinse with plenty of water.
- Prevent petrol, brake fluid and detergent from contacting instruments, panels or the front headlight.

Aluminium components

Exhaust pipe and silencer
Do not use abrasive commercial cooktop cleaners to clean the exhaust pipe or silencer. Use a neutral detergent to clean the painted surface on the exhaust pipe and silencer. If you are unsure whether the exhaust pipe and silencer are painted, contact your dealer.

Storing your motorcycle

If you store your motorcycle outdoors, you might want to consider using a full motorcycle cover.
If you are not going to use your motorcycle for a long period of time, follow these instructions:

- Wash your motorcycle and wax all painted surfaces (except matte painted surfaces). Apply rust preventing oil to all chrome parts.
- Lubricate the drive chain. 2 P. 47
- Place the motorcycle on a maintenance stand and on blocks so that both tyres are off the ground.

After taking the motorcycle out of storage, carry out all maintenance tasks included in the Maintenance schedule.

Transporting your motorcycle

If you need to transport your motorcycle, do so on a motorcycle trailer or in a lorry or on a flatbed trailer with a loading ramp or platform lift and use appropriate fastening straps. Never attempt to tow a motorcycle with one or both wheels on the ground.

NOTICE

Towing the motorcycle can seriously damage the transmission.

You and the Environment

Owning and riding a motorcycle can be a marvellous experience, but it has its share of responsibility in protecting the environment.

Choose mild cleaners

Use biodegradable detergents when washing your motorcycle. Avoid aerosol spray cleaners that contain chlorofluorocarbons (CFCs) that damage the atmosphere's protective ozone layer.

Recycle waste

Put oil and other toxic waste in approved containers and take them to a recycling centre.
Call your town council or environmental service to find out the location of your closest recycling centre and for instructions on how to dispose of waste that cannot be recycled. Do not deposit used engine oil in household rubbish or pour it down the drain or on the ground. Used oil, petrol, coolant and cleaning solvents contain poisons that can harm urban rubbish collection workers and pollute our drinking water, lakes, rivers, and oceans.

Serial numbers

The serial numbers of the frame and engine uniquely identify your motorcycle and are required to register it. They may also be necessary to order replacement parts.
The frame number is stamped on the right side of the steering column.
The engine number is stamped on the right side of the crankcase.
You should make note of these numbers and keep them in a safe place.

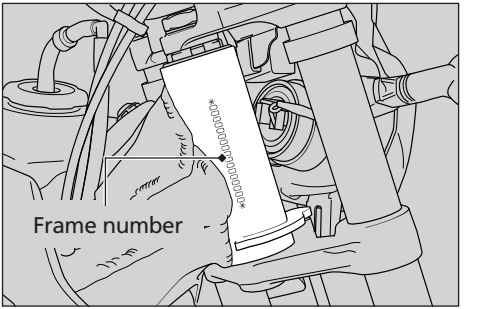

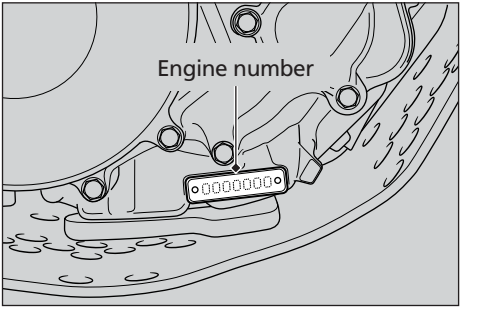

Specifications

Major components..... P. 106
Service Data..... P. 107
Bulbs..... P. 108
Torque specifications..... P. 108

Major components

Overall length	2035 mm (80.1 in)
Overall width	835 mm (32.8 in)
Overall height	1160 mm (45.6 in)
Wheelbase	1335 mm (52.5 in)
Minimum free distance from the ground	330 mm (12.9 in)
Caster angle	24° 34′
Dry weight of the vehicle	82 kg (180.8 lbs)
Kerb weight	87 kg (191.8 lbs)
Maximum load *1	180 kg (396.8 lbs)
Maximum luggage capacity (compartment)	2.5 kg (5.5 lbs)
Passenger capacity	Rider (single)

*1 Including the rider, all the luggage and accessories.

Displacement	259 cm^3	
Bore and stroke	78.0 x 54.2 mm (3.07 x 2.13 in)	
Compression ratio	10.5/1	
Fuel	Unleaded petrol Recommended: RON 95 or higher	
Fuels Containing Alcohol	(E5) Ethanol (ethyl alcohol) 5% by volume. (E10) Ethanol (ethyl alcohol) 10% by volume..	
Fuel / Capacity	4.0 ± 0.2 litres (1.05 US gal, 0.87 Imp. gal)	
Fuel reserve	Approximately 0.7 litres (0.18 US gal, 0.15 Imp. gal)	
Speed ratio	1st	2,385
	2nd	1,933
	3rd	1,500
	4th	1,130
	5th	0,815
Reduction ratio (primary / final)	3,167 / 4,100	

Service Data

Tyre size (Dunlop)	Front	80/100-21 M/C 51 M
	Rear	120/100 R18 M/C 68 M
Tyre size (Michelin)	Front	2,75-21 M/C 45 L
	Rear	4.00 R18 M/C 64L
Tyre type	Front	Inner tube
	Rear	Tubeless
Recommended tyres (Dunlop)	Front	D803FGP
	Rear	D803GP
Recommended tyres (Michelin)	Front	TRIAL COMPETITION
	Rear	TRIAL COMPETITION X11
Tyre pressure (road)	Front	100 kPa (1,02 kgf/cm^2)
	Rear	100 kPa (1,02 kgf/cm^2)
Tyre pressure (off road)	Front	70 kPa (0,7 kgf/cm^2)
	Rear	60 kPa (0,6 kgf/cm^2)
Minimum tread depth	Front	3.0 mm (0.12 in)
	Rear	3.0 mm (0.12 in)
Spark Plug	(standard)	CR6EH-9 (NGK)
Spark plug gap	(not adjustable)	0,80 a 0,90 mm
Idle Speed:	1800 ± 100 r.p.m.	
Recommended engine oil	Motorcycle oil - 4-stroke Repsol 4T SAE 10W30 or equivalent	
Specified transmission oil	REPSOL MOTO TRANSMISSION (75W) ELF HTX740 (75W)	
Engine oil capacity	After draining	0.41 litres (0.86 US gal, 0.72 Imp. gal)
	After draining and filter replacement	0.44 litres (0.93 US gal, 0.77 Imp. gal)
	After disassembly	0.60 litres (1.26 US gal, 1.05 Imp. gal)
Transmission oil capacity	After draining	0.54 litres (1.14 US gal, 0.95 Imp. gal)
	After disassembly	0.57 litres (1.20 US gal, 1.00 Imp. gal)
Recommended brake and clutch fluid	DOT 4	
Cooling system capacity	After draining	0.50 litres (1.06 US gal, 0.87 Imp. gal)
	After disassembly	0.59 litres (1.25 US gal, 1.04 Imp. gal)
Recommended coolant	50 / 50 Mixture of coolant and distilled water	

continued

Recommended drive chain lubricant	Drive chain lubricant	
Drive chain slack	25 to 35 mm	
Standard drive chain	Regina #520	
	No. of links	100
Standard sprocket sizes	Engine sprocket	10 teeth
	Rear wheel sprocket	41 teeth

Bulbs

Front headlight	12V-35/35W
Brake light / rear lamp	LED
Front turn signals	12V-10W × 2
Rear turn signals	12V-10W × 2
Position light	12V-5W
License light	12V-5W

Torque specifications

Engine oil drain bolt	22 N•m (2,2 kgf•m)
Transmission oil drain bolt	22 N•m (2,2 kgf•m)
Left crankcase cover and oil filter cover bolts	10 N•m (1,0 kgf•m)
Front wheel axle	69 N•m (7,0 kgf•m)
Front wheel axle bolt	21 N•m (2,1 kgf•m)
Rear wheel axle nut	69 N•m (7,0 kgf•m)
Front covers top bolts	8 N•m (0,8 kgf•m)
Seat box bolts	10 N•m (1,0 kgf•m)
Air filter cover bolts	3 N•m (0,3 kgf•m)
Radiator upper bolt	10 N•m (1,0 kgf•m)

INDEX

A

Accessories 15
Adjusting the headlight 81

B

Brakes
- Brake pads wear 67
- Fluid 66

Braking 12
Bulb
- Headlight 90
- Position light 92
- Registration plate 93
- Turn signal 92

C

Caring for your motorcycle 98
Catalytic converter 97
Clutch 75
Clutch system 75
Component removal / installation
- Front right / left cover 54
- Right / left side cover 55
- Seat 53
- Seat box- rear fender assy 56

Coolant 47, 64
Covers
- Front cover 54
- Side cover 55

Crankcase breather 80

D

Drive chain 69

E

Engine
- Engine oil 45, 57
- Oil filter 59
- Serial number 104
- Starting 30
- Stop button 28
- Transmission oil 62

Engine drowned 30
Engine number 104
Environment 103
Equipment
- Document bag 36, 95

F

Frame number 104
Front wheel
Removal 86
Fuel 14
  Tank capacity 32
  Tips 32
Fuels containing alcohol 96

G

Gear shift 31

H

Horn button 28

I

Ignition cut-off system
  Angle sensor 95
Indicators
  High beam 27
  Turn signal 27
Instruments 22

L

Load guidlines 17
Load limit 17, 106
Locating malfunctions 82
Location of the parts 20

M

Maintenance
  Basic 43
  Importance 38
  Safety 38
  Schedule 39
Maximum weight limit 17, 106
Modifications 15

O

Oil
  Engine 57
  Transmission 62

P

Parking 13
Pictograms 6
Precautions while riding 11

R

Refuelling 32

S

Safety guidelines 3
Safety precautions 10
Serial numbers 104
Side stand 68
Specifications 106
Speedometer 23
Starting the engine 30
Steering lock 29
Storage
  Bag 36
Storing your motorcycle 101
Suspensions settings
  Front 34
  Rear 35
Switches
  Headlight dimmer 28
  Turn indicator 28

T

Throttle 78
Tips
  Coolant 47
  Engine oil 45
  Fuel 32
  Transmission oil 62
Total odometer 23, 95
Transporting your motorcycle 102
Tripmeter 23, 95
Tyres
  Flat tyres 85
  Pressure 48
  Replacement 48, 85

W

Washing your motorcycle 98
Weight limit 17, 106
Wheels
  Removing the front wheels 86
  Removing the rear wheels 88
  Rims and spokes 74

Printed in Spain

32NN4P10