COTA 301

2023

Montesa

PGM-FI Racing Trial

Owner's Manual

FOR COMPETITION USE ONLY

This motorcycle is designed and manufactured and sold for closed-course competition use only. It does not conform to Federal Motor Vehicle Safety Standards or U.S. EPA Noise and Emission Standards. Operation on public streets, roads, highways, or for off-road recreation is illegal.

State and federal laws prohibit operation of this vehicle except in an organized competitive event on a closed course, or by permit issued by the local governmental jurisdiction. This vehicle is sold "as is" with no warranties.

FOR EXPERIENCED RIDERS, NO PASSENGERS

This motorcycle is designed as an operator-only vehicle and is for use by experienced riders only. The motorcycle load limit and seating configuration do not safely permit the carrying of a passenger.

Read this manual carefully.

This manual should be considered a permanent part of the motorcycle and should remain with the motorcycle when resold.

Safety Messages

Your safety and the safety of others is very important. We have provided important safety messages in this manual and on the COTA 301RR. Please read these messages carefully.

A safety message alerts you to potential hazards that could hurt you or others. Each safety message is preceded by a safety alert symbol ⚠ and one of three words, **DANGER, WARNING**, or **CAUTION**.

These signal words mean:

⚠ **DANGER**	**You WILL be KILLED or SERIOUSLY HURT if you don't follow instructions.**
⚠ **WARNING**	**You CAN be KILLED or SERIOUSLY HURT if you don't follow instructions.**
⚠ **CAUTION**	**You CAN be HURT if you don't follow instructions.**

Each message tells you what the hazard is, what can happen and what you can do to avoid or reduce injury.

Damage Prevention Messages

You will also see other important messages that are preceded by the word ***NOTICE***.

This word means:

NOTICE

Your COTA 301RR or other property can be damaged if you don't follow instructions.

The purpose of these messages is to help prevent damage to your COTA 301RR, other property, or the environment.

MONTESA COTA 301RR

Owner's / Service Manual

This manual describes the service procedures for the COTA 301RR (4ED).

(4ED) Racing version, COTA 301RR RACE REPLICA.

All information in this publication is based on the latest product information available at the time of approval for printing.
MONTESA HONDA, S.A.U. reserves the right to make changes at any time without notice and without incurring any obligation.
No part of this publication may be reproduced without written permission.

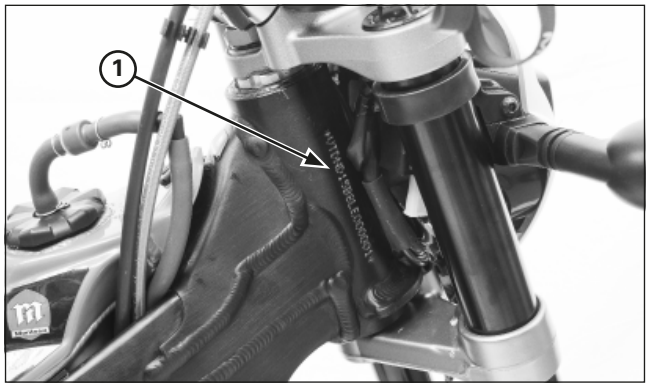

(1) FRAME NUMBER

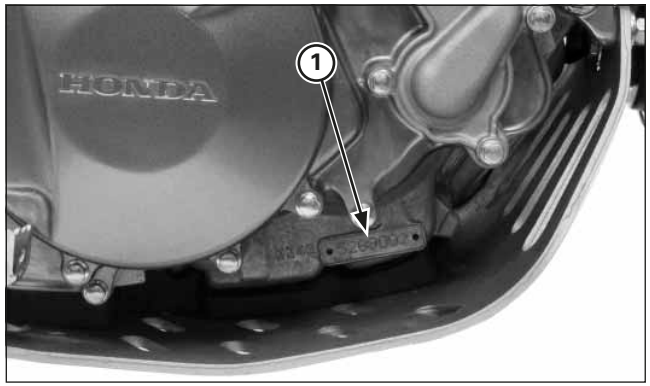

(1) ENGINE NUMBER

Serial numbers

The Vehicle Identification Number (VIN) is stamped on the right side of the steering head.

The serial number of the engine is stamped on the lower right side of the crankcase.

MODEL	TYPE	FRAME No.	ENGINE No.
MRT 300 P	4ED	VTDNE053?PE000001	NN4E7100001

Labels

The following pages show the meanings and locations of the labels on your Cota.
Others provide important safety information. Read this information carefully and don't remove the labels.
If a label comes off or becomes hard to read, contact your dealer for a replacement.
There is a specific symbol on each label. The meanings of each symbol and label are as follows.

1	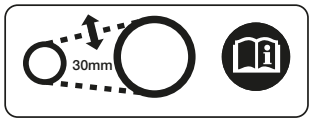	**Keep chain adjusted and lubricated** 25-35 mm (1.0 -1.4 in) Read Owner's Manual.
2		**Caution label** - This motorcycle is not designed to transport a passenger. - Read owner's manual carefully. - For yourprotection always wear your helmet while riding. - (E5) Ethanol (ethyl alcohol) 5% by volume. - (E10) Ethanol (ethyl alcohol) 10% by volume. - Use unleaded gasoline, octane number 95 (RON) or higher.
3		**Radiator cap label** Danger Never open when hot. Hot coolant will scald you. Relief pressure valve begins to open at 15.6 psi (1.1 Kgf/cm^2)
4	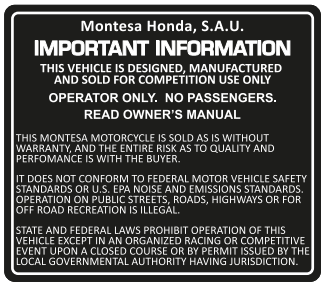	**Safety label**
5		**EC label**

Labels

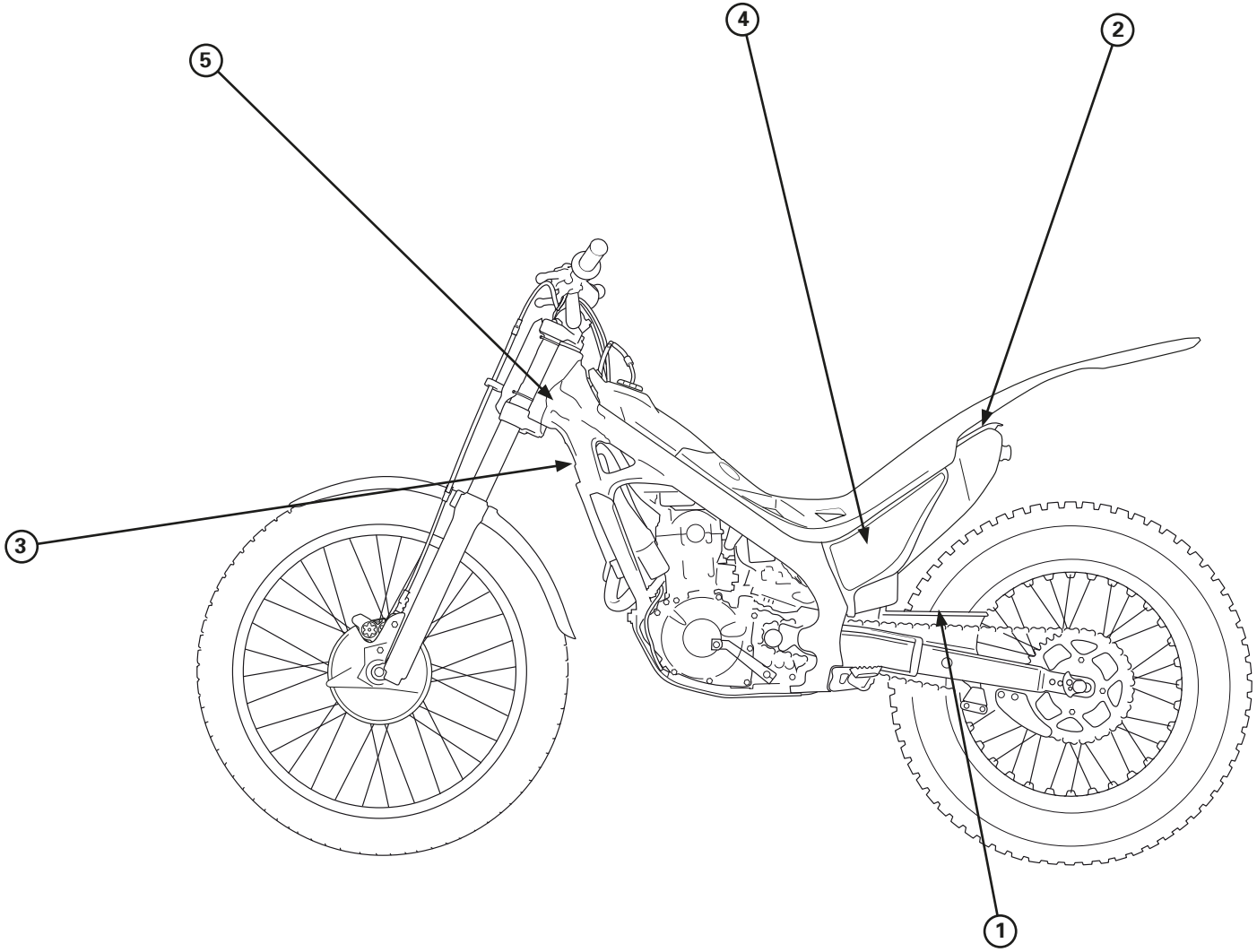

Important Safety Precautions

Your Cota can provide many years of pleasure if you take responsibility for your own safety and understand the challenges you can meet in competitive racing.

As an experienced rider, you know there is much you can do to protect yourself when you ride.
The following are a few precautions we consider to be most important.

Never Carry a Passenger.
Your Cota is designed for one operator only.
Carrying a passenger can cause crashes in which you and others can be hurt.

Wear Protective Gear.
Whether you're practicing to improve your skills, or riding in competition, always wear an approved helmet, eye protection, and proper protective gear.

Take Time to Get to Know Your Cota.
Because every motorcycle is unique, take time to become thoroughly familiar with how this one operates and responds to your commands before placing your machine, and yourself, in competition.

Learn and Respect Your Limits.
Never ride beyond your personal abilites or faster than conditions warrant. Remember that alcohol, drugs, illness and fatigue can reduce your ability to perform well and ride safely.

Don't Drink and Ride.
Alcohol and riding don't mix. Even one drink can reduce your ability to respond to changing conditions, and your reaction time gets worse with every additional drink. So don't drink and ride, and don't let your friends drink and ride either.

Keep your Montesa in Safe Condition.
Maintaining your Cota properly is critical to your safety. A loose bolt, for example, can cause a breakdown in which you can be seriously injured.

Accessories & Modifications

Modifying your Cota or using non-Montesa accessories can make your Cota unsafe.
Before you consider making any modifications or adding an accessory, be sure to read the following information.

⚠ WARNING

Improper accessories or modifications can cause a crash in which you can be seriously hurt or killed.

Follow all instructions in this Owner's Manual regarding modifications and accessories.

Accessories
We strongly recommend that you use only Montesa Genuine accessories that have been specifically designed and tested for your Cota. Because Montesa cannot test all other accessories, you must be personally responsible for proper selection, installation, and use of non-Montesa accessories.
Check with your dealer for assistance and always follow this guideline:

- Make sure the accessory does not reduce ground clearance and lean angle, limit suspension travel or steering travel, alter your riding position, or interfere with operating any controls.

Modifications
We strongly advise you not to remove any original equipment or modify your Cota in any way that would change its design or operation.
Such changes could seriously impair your Cota's handling, stability, or braking, making it unsafe to ride.

General Competition Maintenance

Perform maintenance on firm, level ground using the side stand, a workstand, or equivalent support.
When tightening bolts, nuts or screws, start with the larger diameter or inner fasteners, and tighten them to the specified torque using a crisscross pattern.
Use Montesa Genuine Parts or their equivalent when servicing your Cota.
Clean parts in non-flammable (high flash point) cleaning solvent (such as kerosene) when disassembling. Lubricate any sliding surface, O-rings, or seals before reassembling. Grease parts by coating or filling where specified.
After any engine disassembly, always install new gaskets, O-rings, cotter pins, piston pin clips, snap rings, etc. when reassembling. After reassembly, check all parts for proper installation and operation.

Contents

1. Operating instructions

Operation component locations 1-1
Fuel 1-2
Coolant 1-2
Basic Operation 1-2
Shifting gears 1-4
Braking 1-4
Parking 1-4
Controls 1-5

2. Service data

Specifications 2-1
Service data 2-2
Torque Values 2-5
Tools 2-7
Special 2-7
Tools 2-7
Common 2-7
Lubrication & Seal Points 2-8
Cable & Harness Routing 2-11

3. Service and maintenance

Maintenance schedule 3-1
Pre-ride Inspection 3-1
Warming-up Inspection 3-2
Ride Inspection 3-2
After Ride Inspection 3-2
Replacement Parts 3-2
Fuel Line 3-3
Air Cleaner 3-3
Spark Plug 3-4
Valve Clearance 3-4
Engine Oil/Oil Filter 3-6
Engine Idle Speed 3-8
Transmission Oil 3-8
Coolant 3-9
Clutch System 3-10
Exhaust Pipe And Muffler 3-10
Drive Chain 3-11
Drive Chain Slider 3-11
Drive/Driven Sprockets 3-12
Brake Fluid 3-13
Brake Pad Wear 3-14
Brake System 3-14
Handlebar And Steering Head Bearings 3-15
Wheels And Tires 3-15
Front Suspension 3-16
Fork 3-16
Rear Suspension 3-17
Cleaning 3-18
Storage 3-18

4. Engine servicing

Oil Pressure Relief Valve 4-1
Oil Pump 4-1
Fuel Feed Hose 4-4
Fuel Line Inspection 4-5
Connect the fuel pump 2P connector. 4-6
Fuel Tank/Fuel Pump 4-7
Removal 4-7
Remove the rear fender. 4-7
Disconnect the fuel injector 2P connector. 4-7
Remove the fuel injector socket bolts. 4-7
Injector 4-13
Throttle Body 4-13
Water Seal And Bearing Replacement 4-15
Radiator Removal/Installation 4-17
Engine Removal/Installation 4-18
Cylinder Compression 4-20
Cylinder Head Removal 4-23
Cylinder Head Disassembly 4-25
Cylinder Head Inspection 4-26
Valve Guide Replacement 4-27
Valve Seat Inspection/Refacing 4-28
Cylinder Head Assembly 4-31
Cylinder/Piston 4-32
Cylinder Head Installation 4-37
Camshaft/Cylinder Head Cover Installation 4-38
Right Crankcase Cover 4-40
Clutch Slave Cylinder 4-41
Clutch 4-43
Kickstarter 4-46
Gearshift Linkage 4-47
Left Crankcase Cover 4-49
Flywheel 4-52
Crankcase Separation/Disassembly 4-54
Crankshaft/Transmission Inspection 4-56
Crankcase Bearing Replacement 4-56
Transmission Assembly 4-58
Crankcase Combination 4-59

5. Frame servicing

Front Wheel 5-1
Fork 5-3
Steering stem 5-12
Rear Wheel 5-15
Shock Absorber 5-16
Shock Linkage 5-19
Swingarm 5-20
Front Brake Pad Replacement 5-24
Rear Brake Pad Replacement 5-25
Front brake caliper 5-25
Rear brake caliper 5-26
Front master cylinder 5-27
Rear master cylinder 5-28
Brake pedal 5-28
Clutch master cylinder 5-29

6. Electrical servicing

Charging system inspection 6-1
Ignition system inspection 6-3
PGM-FI System inspection 6-5
MIL and DTC (ISO) error codes for
the PGM-FI injection system. 6-8
Bank angle sensor inspection 6-9
Engine stop switch inspection 6-10
Cooling fan system inspection 6-10
Wiring diagram 6-11

7. Manufacturer and authorized representative for the USA markets

Manufacturer 7-1
Authorized Representative USA market 7-1

Authorized Manuals

The Service Manual used by your authorized dealer is available from your Honda dealer or Helm, Inc. (USA only, Canada: See your dealer to order authorized manuals.)

Also available, but not necessary to service your model, is the Honda Common Service Manual, which explains basic service information for various systems on Honda motorcycles, scooters, and ATV.

The Winter Storage Guide in conjunction with the Owner's Manual and Service Manual can help you prepare your Honda motorcycle, scooter, ATV, and SxS for winter storage.

These Honda manuals are written for the professional technician. However, if you possess the propper tools, observe the safety standards, and are mechanically capable, you should find them easy to use. Special Honda tools are necessary for some procedures.

- **Common Service Manual (61CSM00)**
- **Winter Storage Guide (S9507)**

To The New Owner

By selecting a MONTESA COTA 301RR as your new machine, you have placed yourself in a distinguished family of owners and riders.

The COTA is a high performance trial motorcycle utilizing the latest trial technology. This motorcycle is intended for competition use by experienced riders only.

This new trialer was designed to be as competitive as possible. But motorcycle trial is a physically demanding sport that requires more than just a fine racing machine. To do well, you must be in excellent physical condition and be a skillful rider. For the best possible results, work diligently on your physical conditioning and practice frequently.

The purpose of this Owner's / Service Manual is to help ensure that you obtain the greatest possible satisfaction from your new COTA trialer.

Start-up recommendations

Adjusting the idle

If using your motorcycle at varying elevations, bear in mind that you must adjust the idle; otherwise, you may have problems operating the vehicle. (See page 3-8)

Engine start

If you have problems starting your vehicle, follow the steps below:

1. Open the throttle all the way (100%) and hold.
2. Without releasing the throttle, operate the kick-starter once or twice.
3. Close the throttle and start your motorcycle as normal (page 1-2).

Importance Of Proper Preparation

Proper pre-competition preparation and regular service is essential to rider safety and the reliability of the motorcycle. Any error or oversight made by the technician during preparation or servicing can easily result in faulty operation, damage to the machine, or injury to the rider.

Parts Availability

Orders for the parts tend to be concentrated during the season, so you need to plan your parts orders carefully. To prevent delays in shipment, place orders on regularly replaced and fast-wearing parts well ahead of the season (page 3-2).

How To Use This Manual

The purpose of this Owner's / Service Manual is to help ensure that you obtain the greatest possible satisfaction from your new COTA trialer; satisfaction with the performance of the motorcycle, and through success in competition.

If you plan to do any service on your COTA, section 3 describes standard maintenance and sections 4 through 6 contain information on repair, disassembly, assembly and special tools.

Follow the Maintenance Schedule recommendation (page 3-1) to ensure that your COTA is always in peak operating condition.

Operation component locations

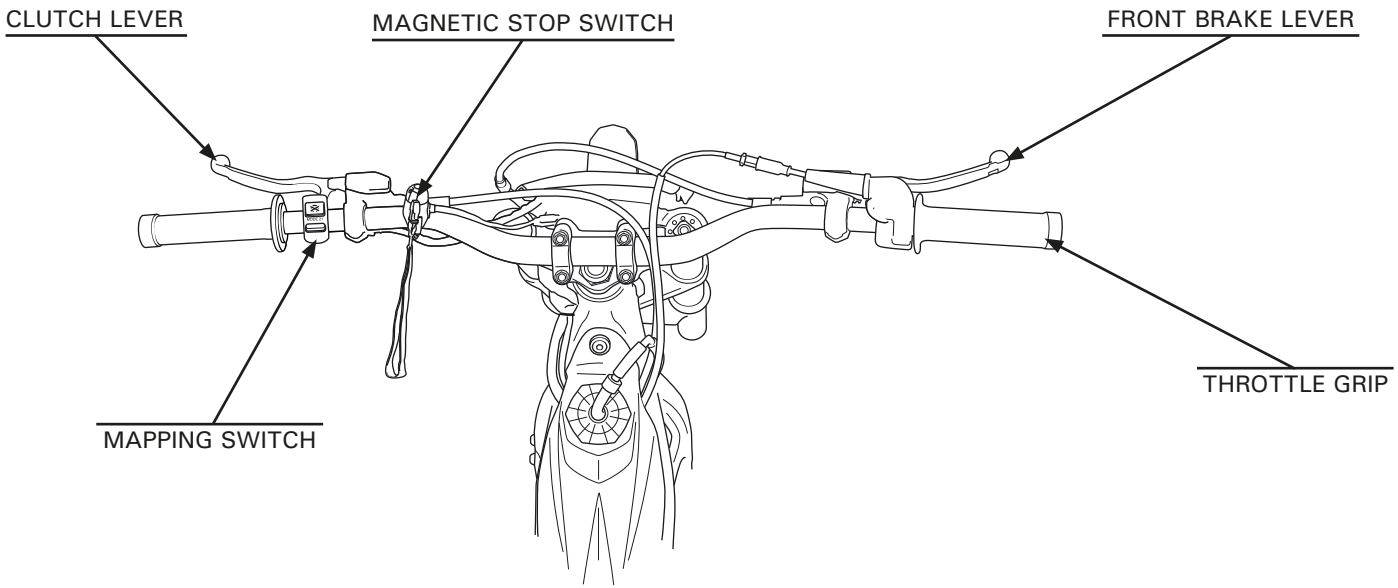

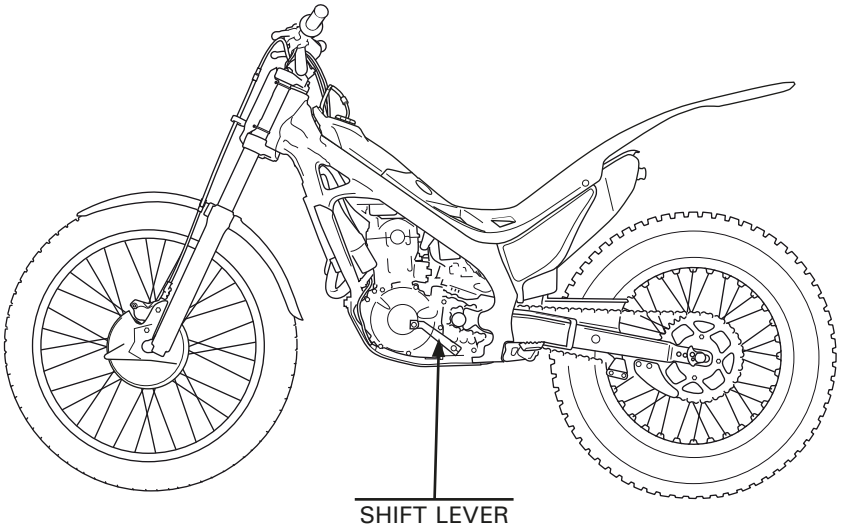

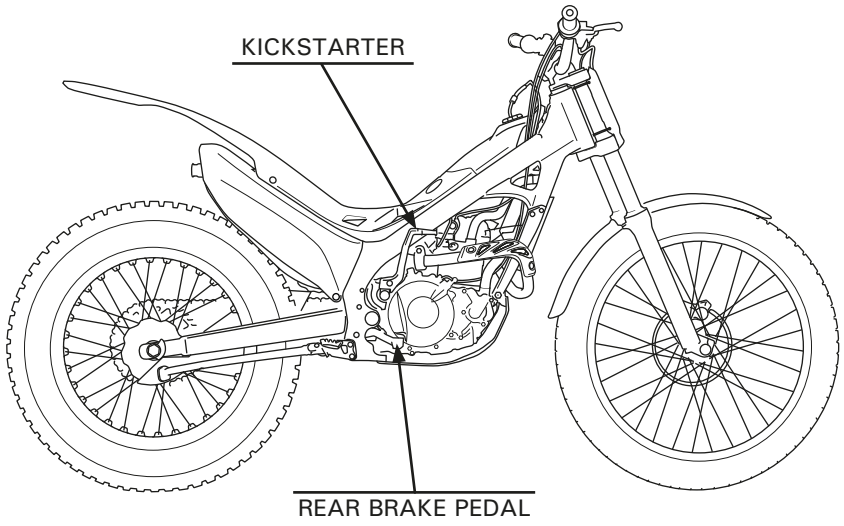

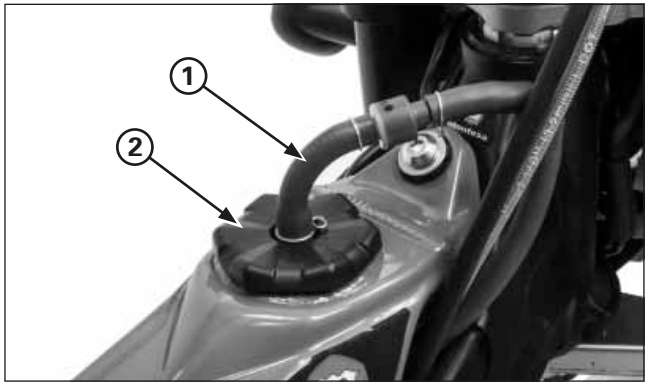

(1) BREATHER HOSE
(2) FUEL TANK CAP

Fuel

Gasoline: Premium unleaded gasoline (commercially available unleaded; pump octane number 91 or higher)
Fuel tank capacity:
2.0 ± 0.2 liter (0.52 US gal, 0.43 Imp gal)

Disconnect the breather hose from the fuel filler cap.
Turn the fuel tank cap counterclockwise, then remove the cap.

⚠ WARNING

Gasoline is highly flammable and is explosive.
You can be burned or seriously injured when refueling.

- **Stop engine and keep heat, sparks, and flame away.**
- **Refuel only outdoors.**
- **Wipe up spills immediately.**

Install the fuel tank cap by turning it clockwise.
Connect the breather hose to the fuel filler cap.

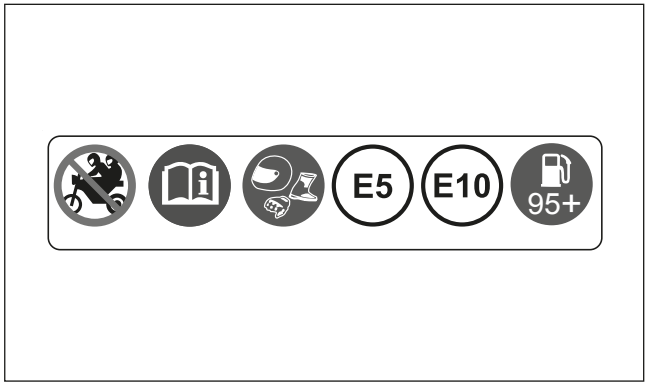

Oxygenated Fuels

Some conventional gasolines are being blended with alcohol or an ether compound. These gasolines are collectively referred to as oxygenated fuels. To meet clean air standards, some areas of the United States and Canada use oxygenated fuels to help reduce emissions.

If you use an oxygenated fuel, be sure it is unleaded and meets the minimum octane rating requirement.

Before using an oxygenated fuel, try to confirm the fuel's contents. Some states/provinces require this information to be posted on the pump.

The following percentages of oxygenates:

ETHANOL (ethyl or grain alcohol) up to 10% by volume.
You may use gasoline containing up to 10% by volume. Gasoline containing ethanol may be marked under the name "Gasohol"

Do not use gasoline containing METHANOL (methyl alcohol).

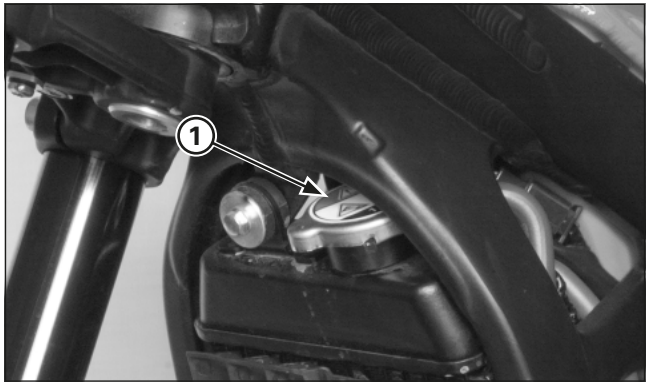

(1) RADIATOR CAP

Coolant

The engine of COTA is a water-cooled type. In order to provide adequate cooling, it is essential that the radiator be filled with coolant up the proper level (See pag. 3-9).

Coolant: 50/50 Mixture of Coolant and Distilled Water

⚠ WARNING

Removing the radiator cap while the engine is hot will allow the coolant to spray out, seriously scalding you.

Always let the engine and radiator cool down before removing the radiator cap.

NOTICE

When filling the coolant system, be sure to bleed air completely. If not, the system cannot be sufficiently filled and will cause overheating.

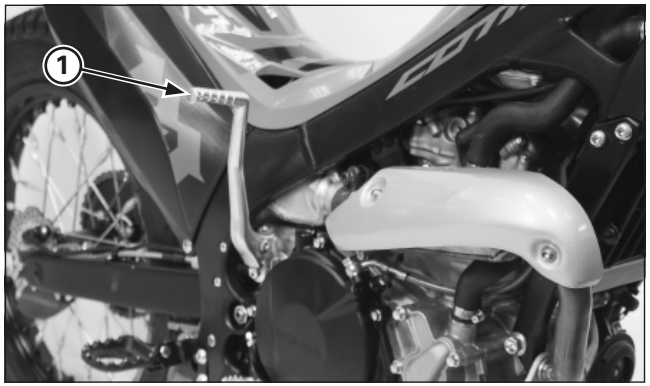

(1) KICKSTARTER PEDAL

Basic Operation

Starting The Engine

⚠ WARNING

Your COTA exhaust contains poisonous carbon monoxide gas. High levels of carbon monoxide can collect rapidly in enclosed areas such as a garage. Do not run the engine with the garage door closed. Even with the door open, run the engine only long enough to move your COTA out of the garage.

Cold Engine Starting
1. Shift the transmission into neutral.
2. Raise the side stand.
3. With the throttle fully closed, operate the kickstarter. Starting from the top of the kickstarter stroke, kick through to the bottom with a rapid, continuous motion.
4. After the engine starts, run it for a few minutes, "blipping" the throttle, until it warms up enough to idle.

NOTICE

Always operate the kickstarter with the throttle fully closed.

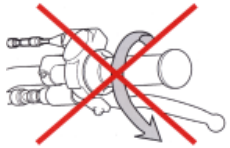

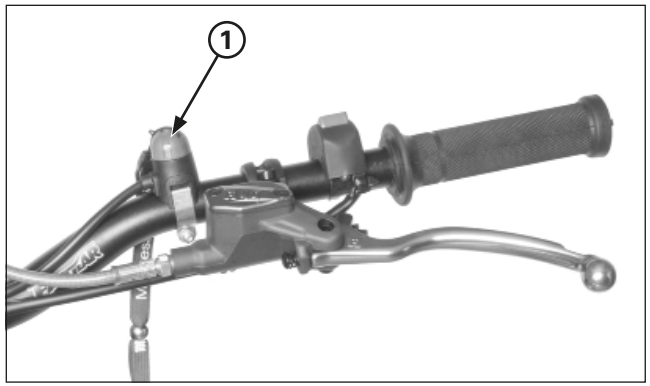

(1) MAGNETIC STOP SWITCH

When you shift the transmission into gear, apply front brake to prevent the motorcycle move forward.

Magnetic Stop Switch

1. Shift the transmission into neutral.
2. Pull the stop magnetic switch (red) until the engine stops completely.

Break-In Procedure

New Motorcycle
Following proper break-in procedure helps ensure that the most important and expensive components on your new motorcycle will provide maximum performance and service life. (Also follow proper break-in procedure for a newly rebuilt engine.)

When riding a new motorcycle, operate the motorcycle for the first 20 minutes using not more than half throttle and shifting gears so that the engine does not lug.

Reconditioned Motorcycle
- After replacing the cylinder and crankshaft, operate the motorcycle for 20 minutes observing the same cautions as for a new motorcycle.
- When the piston, piston ring, gears, etc. are replaced, they must be broken in observing the first 30 minutes using not more than half throttle and shifting gears so that the engine does not lug.

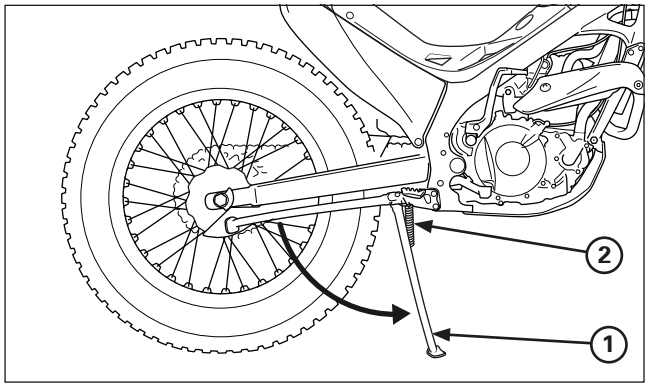

(1) SIDE STAND
(2) SIDE STAND SPRINGS

Side Stand

The side stand is used to support your Cota while parked. To operate, use your foot to lower the side stand until it is fully extended.
Before riding, raise the side stand.

Inspection

1. Check the stand springs for damage or loss of tension.
2. Check the side stand assembly for freedom of movement.

If the stand is stiff or squeaks, clean the area around the pivot and lubricate the pivot bolt with grease or oil lubricant.

NOTICE

Do not start the motorcycle while supported on the side stand, which could be bent.

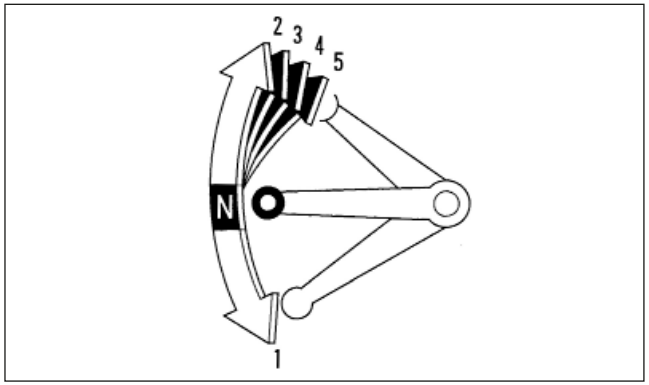

Shifting gears

Your Cota has five forward gears in a one-down, four-up shift pattern.
To start riding, after the engine has been warmed and the side stand raised.

1. Close the throttle and pull the front brake lever in.
2. Pull the clutch lever all the way in.
3. Depress the shift lever from neutral down to first gear.
4. Release the front brake lever. Gradually open the throttle while you slowly release the clutch lever. If the engine (rpm) (speed) is too low when you release the clutch lever, the engine will stall.
   If the engine (rpm) (speed) is too high or you release the clutch lever too quickly, your Cota may lurch forward.
5. When you attain a moderate speed, close the throttle, pull the clutch lever in, and raise the shift lever. After shifting, release the clutch lever and apply the throttle.
6. To continue shifting up to each higher gear, repeat step 5.
7. To shift down to a lower gear, close the throttle, pull the clutch lever in, and depress the shift lever. After shifting, release the clutch lever and apply the throttle.

Remember to close the throttle and pull the clutch lever in completely before shifting.

NOTICE

Improper shifting may damage the engine, transmission, and drive train.

Learning when to shift gears comes with experience. Upshift to a higher gear or reduce throttle before engine (rpm) (speed) gets too high. Downshift to a lower gear before you feel the engine laboring (lugging) at low (rpm).

NOTICE

Downshifting can help slow your motorcycle, especially on downhills. However, downshifting when engine (rpm) is too high can cause engine damage.

NOTICE

To prevent transmission damage, do not coast or tow the motorcycle for long distances with the engine off.

Braking

To slow or stop, apply the front brake lever and rear brake pedal smoothly, while downshifting to match your speed. Gradually increase braking as you feel the brakes slowing your speed. To prevent stalling the engine, pull the clutch lever in before coming to a complete stop. For support, put your left foot down first, then your right foot when you are through using the rear brake pedal.

For maximum braking, close the throttle and firmly apply the front brake lever and rear brake pedal controls.

Applying the brakes too hard may cause the wheels to lock and slide, reducing control of your Cota. If this happens, release the brake controls, steer straight ahead until you regain control, then reapply the brakes more gently.

Generally, reduce your speed or complete braking before beginning a turn. Avoid braking or closing the throttle quickly while turning. Either action may cause one or both wheels to slip. Any wheel slip will reduce your control of your Cota.

When riding in wet or raining conditions, or on loose surfaces, the ability to maneuver and stop will be reduced. All of your actions should be smooth under these conditions. Rapid acceleration, braking, or turning may cause loss of control. For your safety, exercise extreme caution when braking, accelerating, or turning.

When descending a long, steep grade, use engine compression braking by downshifting, with intermittent use of both brakes.

When you brake to a stop, pull the clutch lever in before stopping completely to prevent stalling the engine. For support, put your left foot on the ground first, then your right foot when you have finish braking.

Parking

Lower the side stand to support your Cota.
Always choose a level surface to park.

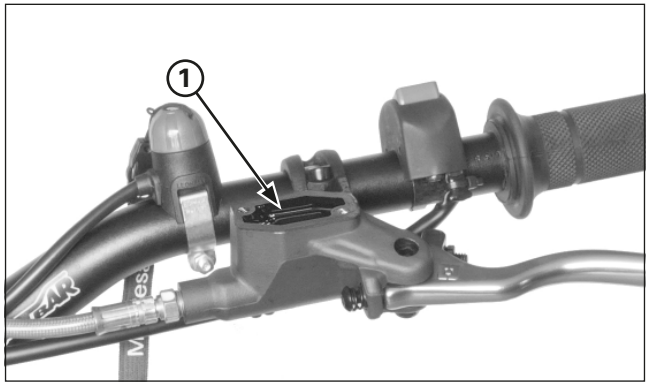

(1) UPPER LEVEL LINE

Controls

Clutch

Your COTA has a hydraulically actuated clutch. There are no adjustments to perform but the clutch system must be inspected periodically for fluid level and leakage.
If the control lever free play becomes excessive and the motorcycle creeps or stalls when shifted into gear, or if the clutch slips, causing acceleration to lag behind engine speed, there is probably air in the clutch hydraulic system and it must be bled out.

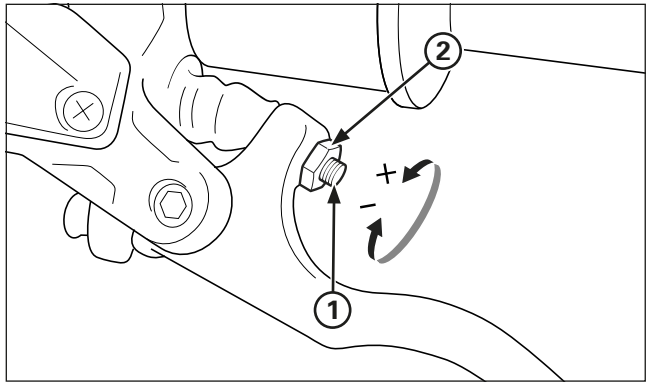

(1) ADJUSTER
(2) LOCK NUT

Clutch Lever

The clutch lever free play can be adjusted by turning the adjuster.
Free play must be adjusted to provide 0.5 – 1.5 mm (0.019 – 0.060 in) clearance between the end of the adjuster and the clutch master cylinder piston.

- To reduce free play, turn the adjuster clockwise, then tighten the lock nut securely.
- To increase free play, turn the adjuster counterclockwise, then tighten the lock nut securely.

If the clutch will not disengage or motorcycle creeps with clutch disengaged,there is probably air in the clutch system and it must be bled.

NOTICE

Do not adjust the end of the adjuster and the clutch master cylinder piston below 0.5 mm (0.019 in).

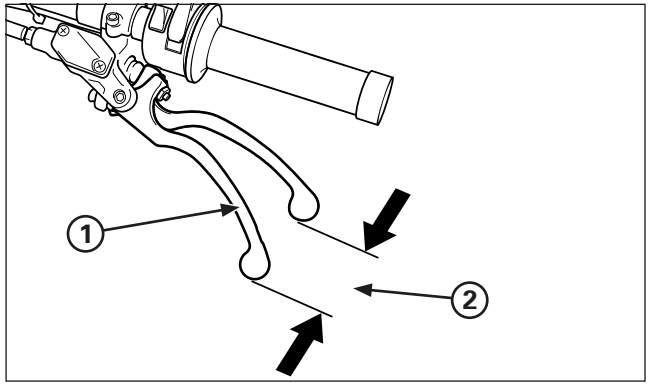

(1) CLUTCH LEVER
(2) FREE PLAY

Clutch Lever Free Play
Standard cluth lever free play should be between 0.5 – 15 mm (0.019 – 0.60 in).

NOTICE

Do not adjust the free play of the lever to less than 5 mm (0.196 in).

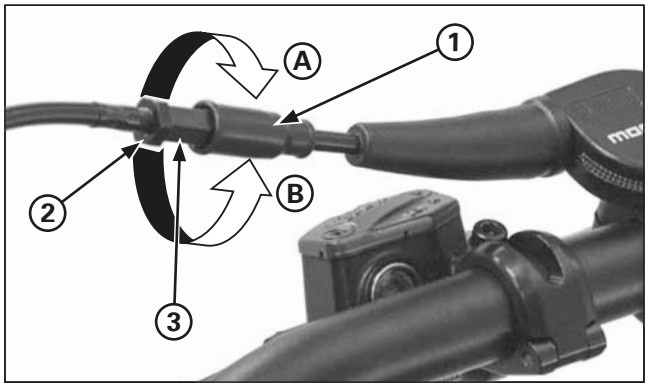

(1) DUST COVER
(2) LOCK NUT
(3) ADJUSTER
(A) DECREASE
(B) INCREASE

Throttle Grip

Throttle Grip Free Play
Standard throttle grip free play is approximately 3 mm (0.12 in) of grip rotation.
Adjustment is made with the integral throttle cable adjuster.
Slide the dust cover off from the integral cable adjuster.
Turning the adjuster in direction "A" will decrease free play and turning it in direction "B" will increase free play.
Tighten the lock nut after adjustment.

Operate the throttle grip to ensure that it functions smoothly and returns completely in all steering position.

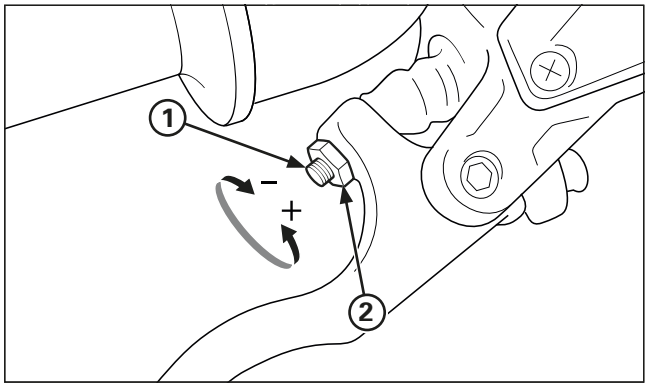

(1) ADJUSTER
(2) LOCK NUT

Front brake lever

The front brake lever free play can be adjusted by turning the adjuster.
Free play must be adjusted to provide 0.5 – 1.5 mm (0.019 – 0.060 in) clearance between the end of the adjuster and the front brake master cylinder piston.

- To reduce free play, turn the adjuster clockwise, then tighten the lock nut securely.
- To increase free play, turn the adjuster counterclockwise, then tighten the lock nut securely.

If brake lever feels soft or spongy, there is probably air in the brake system and it must be bled.

NOTICE

Do not adjust the end of the adjuster and the front brake master cylinder piston below 0.5 mm (0.019 in).

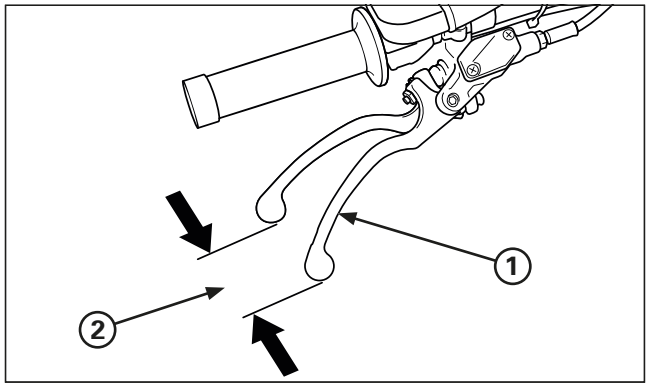

(1) FRONT BRAKE LEVER
(2) FREE PLAY

Front brake lever free play
Standard front brake lever free play should be between 0.5 – 15 mm (0.019 – 0.60 in).

NOTICE

Do not adjust the free play of the lever to less than 5 mm (0.196 in).

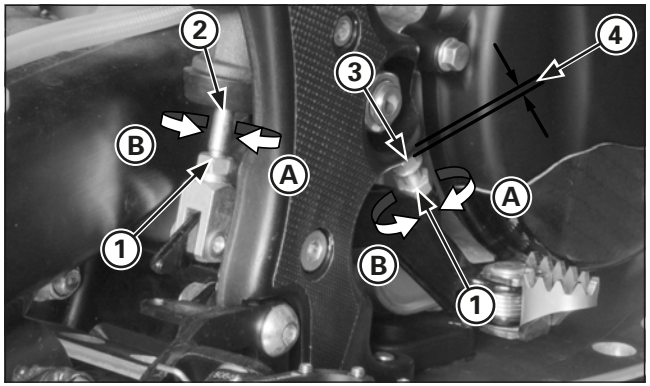

(1) LOCK NUT
(2) ADJUSTING BOLT
(A) RAISE THE PEDAL HEIGHT
(B) LOWER THE PEDAL HEIGHT

Brake pedal height

The brake pedal height can be adjusted to the rider's preference.

To adjust the rear brake pedal height:
1. Loosen the push rod lock nut and brake pedal adjusting bolt lock nut. Then turn the both adjusting bolts in direction "A" to raise the pedal, or in direction "B" to lower it.
2. Tighten the lock nuts at the desired pedal height.
3. After adjustment, check the brake pedal free play at the top of the pedal.
   Make sure that the clearance between the front adjusting bolt and frame is at least 1 mm (0.04 in).

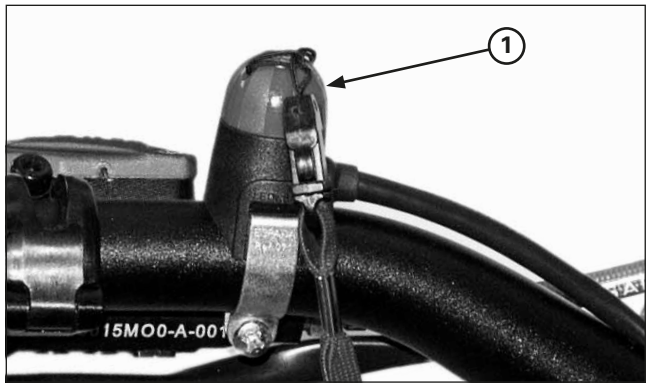

(1) ENGINE STOP BUTTON

Magnetic stop switch

Pull the stop magnetic switch (red) until the engine stops completely.

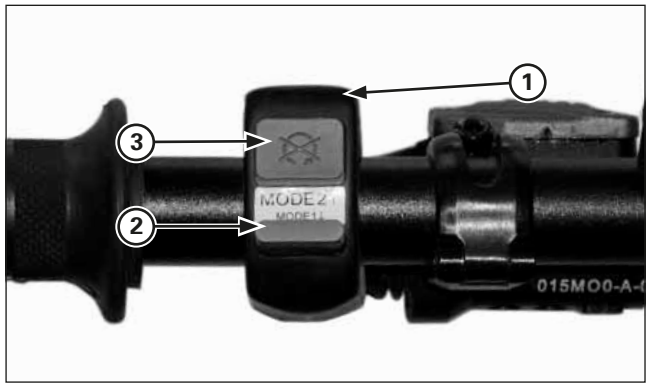

(1) MODE SWITCH
(2) MODE 1
(3) MODE 2

Mode switch

The ECU for the COTA 301RR PGM-FI electronic injection system has two operational maps which can be selected depending on the conditions:

Switch in Mode 1:
Standard

Switch in Mode 2:
Powered

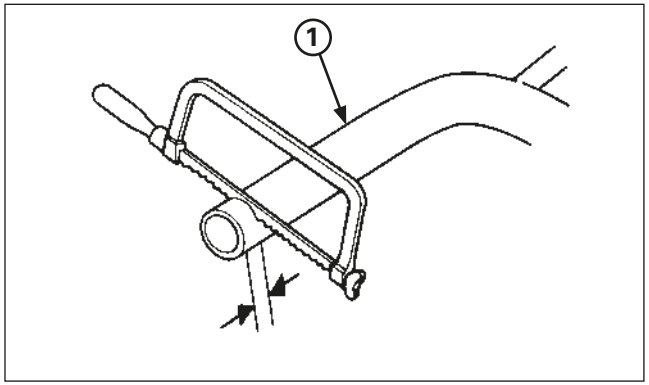

(1) HANDLEBAR

Handlebar position, width and shape

Position the handlebar so that gripping the bar and operating the controls is comfortable while both seated and standing, while riding straight ahead and turning.

Handlebar width can be trimmed with a hacksaw to better your particular shoulder width and riding preference. Think this though carefully and cut off just a small amount at a time from both sides equally.

NOTICE

Chamfer the edges to remove burrs and other irregularities or roughness after shaping.

An alternate handlebar shape, through varying rise or rearward sweep dimensions, will provide further adjustment to riding position and may better suit your particular body size or riding style. Each of the ergonomic dimensions of the motorcycle were determined to suit the greatest possible number of riders based on an average size rider.

Specifications

Item	Specification
Dimensions	
Overall length	2,020 mm (79.52 in)
Overall width	840 mm (33.07 in)
Overall height	1,135 mm (44.68 in)
Wheelbase	1,320 mm (51.98 in)
Seat height	677 mm (26.65 in)
Ground clearance	300 mm (11.81 in)
Frame	
Type	Aluminium twin tube
Front suspension	Telescopic
Rear suspension	Swingarm PRO-LINK
Front tire	MICHELIN TRIAL COMPETITION (2.75-21 M/C 45L) / (2,75-21 M/C 45M)*
Rear tire	MICHELIN TRIAL COMPETITION X11 (4.00 R18 M/C 64L) / (4.00 R18 M/C 64M)*
Front brake, diameter	Single disc, 184 mm (7.24 in)
Rear brake, diameter	Single disc, 150 mm (5.9 in)
Fuel capacity	2.0 ± 0.2 litres
Caster angle	24° 34′
Trail length	63 mm (2.48 in)
Engine	
Type	Liquid cooled 4–stroke engine
Cylinder arrangement	Single cylinder, 3.5° inclined from vertical
Bore and stroke	81.5 x 57.2 mm (3.20 x 2.25 in)
Displacement	298 cm^3
Compression ratio	10.4 : 1
Valve timing Intake valve opens Intake valve closes Exhaust valve opens Exhaust valve closes	 9° BTDC 27° ABDC 37° BBDC 5° ATDC (at 1.0 mm lift)
Lubrication system	Forced pressure and wet sump
Starting system	Primary kickstarter

Item		Specification
Fuel System		
Type		PGM-FI
Identification number		GQPMD
Throttle bore		28 mm (1.10 in)
Drive Train		
Clutch operating system		Hydraulic operated
Clutch type		Wet, multi-plate
Transmission		5 speed constant mesh
Primary reduction		3.167 (57/18T)
Gear ratio	1st	2.800 (42/15T)
	2nd	2.385 (31/13T)
	3rd	2.000 (30/15T)
	4th	1.273 (28/22T)
	5th	0.815 (22/27T)
Final reduction		4.100 (41/10T)
Gearshift pattern		1 – N – 2 – 3 – 4 – 5
Electrical		
Alternator		Triple phase output alternator
Ignition system		PGM-IGN
Regulator type		SCR shorted/triple phase, full wave rectification

* Minimum speed rating "L"

Service data

Unit: mm (in)

Item	Specification
Lubrication	
Specified engine oil	Repsol 4T oil-stroke motorcycle oil SAE 10W-30 or equivalent
Engine oil capacity after draining after oil filter change after disassembly	 0.41 liter (0.43 US qt, 0.36 Imp qt) 0.44 liter (0.46 US qt, 0.39 Imp qt) 0.60 liter (0.63 US qt, 0.53 Imp qt)
Specified transmission oil	REPSOL MOTO TRANSMISSION (75W) ELF HTX740 (75W)
Transmission oil capacity after draining after disassembly	 0.54 liter (0.57 US qt, 0.48 Imp qt) 0.57 liter (0.60 US qt, 0.50 Imp qt)
Fuel System	
Throttle body identification No.	GQPMD
Throttle grip free play	3 mm (0.118 in)
Engine idle speed	1,800 ± 100 (rpm)
Fuel pressure	314 - 382 kPa (3,2 - 3,9 kgf/cm^2)
Fuel pump flow at 12 V	125 cm^3 minimum/10 seconds
Injector resistance	11.1 – 12.3 Ω (20˚C/68˚F)
Cooling System	
Recommended coolant	50/50 mixture coolant and distilled water
Radiator cap relief pressure	108 kPa (1.1 kgf/cm^2)

Item		Standard	Service limit
Cylinder Head/Valves			
Cylinder compression		189 psi (1,300 kPa, 13.2 kgf/cm^2)	–
Cylinder head warpage		–	0.05 (0.002)
Valve stem O.D.	IN EX	0.12 ± 0.03 (0.005 ± 0.001) 0.30 ± 0.03 (0.012 ± 0.001)	– –
	IX EX	4.475 – 4.490 (0.1762 – 0.1768) 4.465 – 4.480 (0.1758 – 0.1764)	4.470 (0.1760) 4.460 (0.1756)
Valve guide I.D.	IN/EX	4.500 – 4.512 (0.1772 – 0.1776)	4.552 (0.1792)
Valve stem-to-guide clearance	IN EX	0.010 – 0.037 (0.0004 – 0.0015) 0.020 – 0.047 (0.0008 – 0.0019)	– –
Valve guide projection above cylinder head	IN EX	8.0 – 8.3 (0.31 – 0.33) 8.2 – 8.5 (0.32 – 0.33)	– –
Valve spring free length	 Inner Outer	 25.41 (1.000) 28.32 (1.115)	 24.9 (0.98) 27.6 (1.09)
Rocker arm I.D.		10.000 – 10.015 (0.3937 – 0.3943)	10.051 (0.3957)
Rocker arm shaft O.D.		9.972 – 9.987 (0.3926 – 0.3932)	9.925 (0.3907)
Rocker arm-to-shaft clearance		0.013 – 0.043 (0.0005 – 0.0017)	0.11 (0.04)
Cam lobe height	AD ES	32.011 – 33.051 (1.2603 – 1.3012) 32.855 – 32.935 (1.2935 – 1.2967)	31.871 (1.2548) 32.748 (1.2893)

Unit: mm (in)

Item		Standard	Service limit
Cylinder/Piston			
Cylinder	I.D	81.500 – 81.515 (3.2086 – 3.2092)	81.540 (3.2102)
	Taper	–	0.05 (0.002)
	Out-of- round	–	0.05 (0.002)
	Warpage	–	0.05 (0.002)
Piston	O.D.	81.470 – 81.480 (3.2074 – 3.2078)	81.440 (3.2062)
	Measurement point	3.0 (0.118) from bottom of skirt	–
	Pin bore I.D.	16.006 – 16.010 (0.6301 – 0.6303)	16,02 (0,6307)
Piston pin	O.D.	15.997 – 16.000 (0.6298 – 0.6299)	15.99 (0.6295)
Piston ring			
End gap			
	Top	0.20 – 0.30 (0.008 – 0.0118)	0.44 (0.0173)
	Second	0.35 – 0.50 (0.0137 - 0.0197)	0.64 (0.0251)
	Oil (side rail)	0.20 – 0.70 (0.008 – 0.028)	0.90 (0.0354)
Ring-to-groove clearance			
	Top	0.070 – 0.110 (0.028 – 0.0043)	0.115 (0.0045)
	Second	0.020 – 0.060 (0.008 – 0.0236)	0.065 (0.0026)
Cylinder-to-piston clearance		0.020 – 0.045 (0.008 – 0.0177)	0.08 (0.003)
Piston-to-piston pin clearance		0.006 – 0.013 (0.0002 – 0.0005)	0.03 (0.0011)
Clutch/Gearshift Linkage			
Recommended clutch fluid		DOT 4 brake fluid	–
Clutch spring free length		27.6 (1.09)	26.8 (1.06)
Clutch disc thickness		3.22 – 3.38 (0.127 – 0.133)	3.15 (0.124)
Clutch plate warpage		–	0.10 (0.004)
Clutch slave cylinder I.D.		27.000 – 27.021 (1.0630 – 1.0638)	–
Clutch slave piston O.D.		26.940 – 26.960 (1.0606 – 1.0614)	–
Kickstarter			
Spindle O.D.		16.466 – 16.484 (0.6483 – 0.6490)	16.46 (0.648)
Pinion gear I.D.		16.516 – 16.534 (0.6502 – 0.6509)	16.55 (0.652)
Idle gear I.D.		17.016 – 17.034 (0.6699 – 0.6706)	17.06 (0.672)
Countershaft O.D. at kickstarter idle gear		16.983 – 16.994 (0.6686 – 0.6691)	16.97 (0.668)

Unit: mm (in)

Item		Standard	Service limit
Crankshaft/Transmission			
Crankshaft runout	Right	–	0.03 (0.001)
	Left	–	0.05 (0.002)
Connecting rod big end			
Side clearance		0.30 – 0.75 (0.012 – 0.030)	0.8 (0.03)
Radial clearance		0.06 – 0.18 (0.002 – 0.007)	0.05 (0.002)
Transmission gear I.D.	M4	23.020 – 23.041 (0.9063 – 0.9071)	23.07 (0.908)
	M5	23.020 – 23.041 (0.9063 – 0.9071)	23.07 (0.908)
	C1	20.020 – 20.041 (0.7882 – 0.7890)	20.06 (0.790)
	C2	25.020 – 25.041 (0.9850 – 0.9859)	25.06 (0.987)
	C3	25.020 – 25.041 (0.9850 – 0.9859)	25.06 (0.987)
Gear bushing D.I.	M5	20.000 – 20.021 (0.7866 – 0.7882)	20.05 (0.789)
	C1	17.000 – 17.018 (0.6693 – 0.6700)	17.04 (0.671)
	C2	22.000 – 22.021 (0.8661 – 0.8670)	22.04 (0.868)
	C3	22.000 – 22.021 (0.8661 – 0.8670)	22.04 (0.868)
O.D.	M4	22.979 – 23.000 (0.9047 – 0.9055)	22.96 (0.904)
	M5	22.979 – 23.000 (0.9047 – 0.9055)	22.96 (0.904)
	C1	19.979 – 20.000 (0.7866 – 0.7874)	19.95 (0.785)
	C2	24.979 – 25.000 (0.9834 – 0.9843)	24.95 (0.982)
	C3	24.979 – 25.000 (0.9834 – 0.9843)	24.95 (0.982)
Countershaft O.D.			
at C1 bushing		16.983 – 16.994 (0.6686 – 0.6691)	16.97 (0.668)
at C2/C3 bushing		21.959 – 21.980 (0.8645 – 0.8654)	21.94 (0.864)
at kickstarter idle gear		16.983 – 16.994 (0.6686 – 0.6691)	16.97 (0.668)
Shift fork I.D.	C	11.003 – 11.024 (0.4332 – 0.4330)	11.04 (0.435)
	R, L	12.035 – 12.056 (0.4738 – 0.4746)	12.07 (0.475)
Shift fork claw thickness	C	4.93 – 5.00 (0.194 – 0.197)	4.8 (0.19)
	R, L	4.93 – 5.00 (0.194 – 0.197)	4.8 (0.19)
Shift fork shaft O.D.	C	10.983 – 10.994 (0.4324 – 0.4328)	10.97 (0.432)
	R, L	11.966 – 11.984 (0.4711 – 0.4718)	11.95 (0.470)
Oil pump			
Tip clearance		–	0.20 (0.008)
Body clearance		0.15 – 0.20 (0.006 – 0.008)	–
Side clearance		0.05 – 0.12 (0.002 – 0.004)	–

Unit: mm (in)

Item		Standard	Service Limit
Wheels/Tires			
Axle runout			0.20 (0.008)
Tire air pressure			
For road use		100 kPa (1.01 kgf/cm²)	–
Comptetion use only	Front	39 – 44 kPa (0.40 – 0.45 kgf/cm²)	–
	Rear	29 – 34 kPa (0.30 – 0.35 kgf/cm²)	–
Wheel rim runout	Radial	–	2.0 (0.08)
	Axial	–	2.0 (0.08)
Drive chain slack		25 – 35 (1.0 – 1.4)	–
Drive chain slider thickness		–	2.0 (0.08) from upper surface
Front Suspension SHOWA			
Left fork spring free length		389 (15.33)	381.7 (15.03)
Fork tube runout		0.35 – 0.50 (0.014 – 0.020)	0.20 (0.008)
Recommended fork fluid		Showa SS05 (SAE 5W) or equivalent	
Pre-load adjuster setting		2.5 ± 0.5 turns out from full soft	–
Damping adjuster setting		Tension adjuster:	–
		15 ± 2 clicks from full hard	–
		Compression adjuster:	–
		17 ± 2 clicks from full hard	–
Fork oil level	Right	51 (2.0)	–
	Left	87 (3.4)	–
Fork oil capacity	Right	405 cm³	–
	Left	410 cm³	–

Unit: mm (in)

Item		Standard	Service Limit
Rear Suspension SHOWA			
Shock absorber spring pre-load		124.5 ± 1 (4.9 ± 0.04)	–
Spring free length		133 (5.2)	130.3 (5.13)
Nitrogen gas pressure		0.88 - 0.98 MPa (9 - 10 kgf/cm²)	–
Tension adjuster setting		5 ± 1 clicks from full hard	–
Brakes			
Recommended brake fluid		DOT 4 brake fluid	–
Front	Brake disc thickness	3.0 (0.12)	2.5 (0.10)
	Brake disc runout	–	0.15 (0.006)
Rear	Brake disc thickness	3.0 (0.12)	2.5 (0.10)
	Brake disc runout	–	0.15 (0.006)
Electrical			
Spark plug	Standard:	NGK: CR6EH-9	–
Spark plug gap		0.80 – 0.90 (0.031 – 0.035)	–
Ignition coil resistance			
Primary		2.6 -3.2 Ω (20° C)	–
Secondary with plug cap		17.3 -22.8 kΩ (20° C)	–
Secondary without plug cap		13.5 – 16.5 KΩ (20° C)	–
Ignition pulse generator			
Resistance		85 -115 Ω (20° C)	–
Alternator			
Regulated voltage		13.5 – 14.5 V/1,800 (rpm)	–
Charging coil resistance		0.7 -1.0 Ω (20° C)	–
ECT sensor resistance		2.3 -2.6 kΩ (20° C)	-
Bulbs			
Headlight		12V	–

Torque Values

Standard

Item	Torque N•m (kgf•m / lbf•ft)
5 mm bolt and nut	5 (0.52 / 3.5)
6 mm bolt and nut	10 (1.0 / 7)
8 mm bolt and nut	22 (2.2 / 16)
10 mm bolt and nut	33 (3.4 / 25)
12 mm bolt and nut	53 (5.4 / 40)
5 mm screw	4 (0.42 / 3)
6 mm screw and flange bolt (SH type)	9 (0.9 / 7)
6 mm flange bolt and nut	12 (1.2 / 9)
8 mm flange bolt and nut	26 (2.7 / 20)
10 mm flange bolt and nut	38 (3.9 / 29)

Cylinder stud bolt:

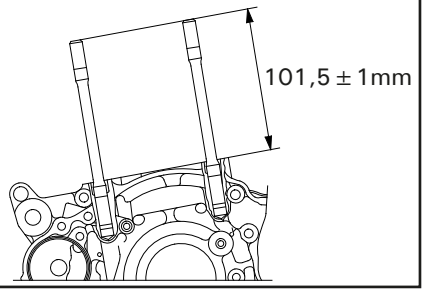

Exhaust pipe stud bolt:

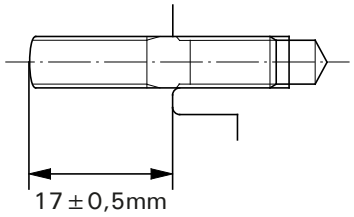

Insulator band (cylinder head side):

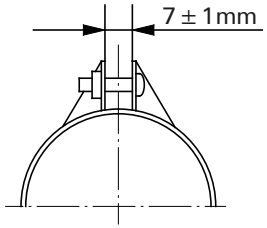

Insulator band (throttle body side):

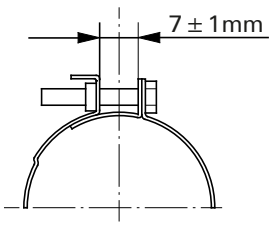

Engine

Item	Q'ty	Thread Dia. (mm)	Torque N•m (kgf•m / lbf•ft)	Remarks
Transmission oil drain bolt	1	8	22 (2.2 / 16)	Note 1
Engine oil drain bolt	1	8	22 (2.2 / 16)	Note 1
Right crankcase cover joint pipe	1	18	18 (1.8 / 13)	Note 2
Timing hole cap	1	14	7 (0.7 / 5.1)	Note 3
Bearing set plate socket bolt	4	6	9.8 (1.0 / 7)	Note 4
Bearing set plate screw	2	6	12 (1.2 / 9)	Note 4
Bearing set plate flat screw	2	6	9.8 (1.0 / 7)	Note 4
Cylinder head sealing bolt	1	12	32 (3.3 / 24)	Note 4
Cylinder head mounting nut	2	9	39 (4.0 / 29)	Note 1
Cylinder head joint pipe	1	18	18 (1.8 / 13)	Note 2
Vacuum port joint	1	5	2.5 (0.25 / 1.8)	
Primary drive gear special bolt	1	12	108 (11.0 / 80)	Note 1
Flywheel nut	1	18	167 (17.0 / 123)	Note 1
Cam chain tensioner bolt	1	6	12 (1.2 / 9)	Note 4
Valve clearance adjusting nut	4	6	14 (1.4 / 10)	Note 1
Injector holder socket bolt	2	6	9.8 (1.0 / 7)	
Fuel hose banjo bolt (holder side)	1	18	24 (2.4 / 17.7)	
Water pump impeller	1	7	12 (1.2 / 9)	
Clutch oil bleeder screw	1	8	6 (0.6 / 4.3)	
Clutch spring bolt	6	6	12 (1.2 / 9)	
Clutch center lock nut	1	18	69 (7.0 / 51)	Note 1
Drive sprocket UBS bolt	1	8	31 (3.2 / 23)	
Shift drum center special bolt	1	8	22 (2.2 / 16)	Note 4
Shift drum stopper arm bolt	1	6	12 (1.2 / 9)	
Shift return spring pin	1	8	22 (2.2 / 16)	
Ignition pulse generator bolt	2	5	5.4 (0.55 / 4.0)	Note 4
Stator mounting bolt	3	5	5.4 (0.55 / 4.0)	Note 4
Spark plug	1	10	16 (1.6 / 12)	Note 2

Notes: 1. Apply clean engine oil to the threads and seating surface.
2. Apply sealant to the threads.
3. Apply grease to the threads.
4. Apply a locking agent to the threads.

Frame

Item	Q'ty	Thread Dia. (mm)	Torque N•m (kgf•m, lbf•ft)	Remarks
Handlebar holder bolt	4	8	22 (2.2 / 16)	Note 1
Front axle	1	17	69 (7.0 / 51)	Note 1
Rear axle nut	1	17	69 (7.0 / 51)	Note 1
Final driven sprocket nut	4	8	32.5 (3.3 / 23.9)	
Shock absorber:				
Upper mounting bolt/nut	1	10	39 (4.0 / 29)	
Lower mounting bolt/nut	1	10	39 (4.0 / 29)	
Fork top pinch bolt	2	8	21 (2.1 / 15.4)	Note 1
Fork bottom pinch bolt	4	8	21 (2.1 / 15.4)	Note 1
Swingarm pivot nut	1	14	69 (7.0 / 51)	Note 1
Front brake disc mounting bolt	4	6	19 (1.9 / 14)	Note 2
Rear brake disc mounting bolt	4	6	17 (1.7 / 12.5)	Note 2
Side stand pivot nut	1	10	23 (2.3 / 17)	
Side stand bracket mounting bolt	2	8	27 (2.8 / 20)	Note 2
Exhaust pipe flange nut	2	6	12 (1.2 / 9)	
Engine hanger:				
Upper hanger bolt/nut	2	8	24 (2.4 / 17)	
Front hanger bolt	1	10	50 (5.1 / 37)	Note 1
Down tube mounting bolt	4	8	26 (2.7 / 19)	Note 1
Rear lower bolt	1	10	39 (4.0 / 29)	Note 1
Skid plate:				
Front mounting bolt	4	8	27 (2.8 / 20)	
Throttle housing bolt	2	5	4.2 (0.43 / 3.1)	
Clutch lever holder bolt	2	5	5.5 (0.56 / 4)	
Front brake master cylinder holder bolt	2	5	5.5 (0.56 / 4)	
Front brake caliper mounting bolt	2	8	27 (2.8 / 20)	Note 2
Brake hose:				
Front master cylinder	1	10	14 (1.4 / 10.3)	
Front caliper	1	8	20 (2.0 / 14)	
Rear master cylinder	1	10	26 (2.7 / 19)	
Rear brake caliper	1	10	26 (2.7 / 19)	

Frame

Item	Q'ty	Thread Dia. (mm)	Torque N•m (kgf•m, lbf•ft)	Remarks
Brake pedal pivot bolt	1	8	29 (3.0 / 22)	Note 2
Steering head top thread	1	26	5 (0.5 / 3.6)	Note 1
Steering stem nut	1	20	99 (9.9 / 73)	Note 1
Clutch hose (master cylinder)	1	10	14 (1.4 / 10.3)	
Clutch hose (secondary cylinder)	1	10	26 (2.7 / 20)	
Rear master cylinder mounting bolt	2	6	9 (0.8 / 6.6)	
ECT sensor	1	12	23 (2.3 / 17)	
Fuel hose banjo bolt	1	12	22 (2.2 / 16)	
Fuel pump mounting bolt	7	5	8 (0.8 / 5.9)	
Front spoke nipple	32	BC 3,5	3.7 (0.38 / 2.8)	
Rear spoke nipple	32	4	2.5 (0.26 / 1.9)	
Shock arm bolt/nut	1	10	39 (4.0 / 29)	
Shock link bolt/nut	2	10	39 (4.0 / 29)	
Rim lock nut	1	8	13 (1.3 / 9)	
Fork cap	2	36	22 (2.2 / 1.6)	
Right fork adjuster case lock nut	1	10	15 (1.5 / 11)	
Right fork lower bolt	1	14	34 (3.5 / 25)	
Left fork lower bolt	1	14	34 (3.5 / 25)	

Notes: 1. Apply grease to the sliding surface.
2. Apply a locking agent to the threads.

Tools
Special

Description	Tool number	Applicability
Bearing remover, 12 mm	07936–166010A	Water pump bearing
Remover handle	07936–3710100	
Remover weight	07936–371020A	
Mechanical seal installer	07965–415000A	Water seal
Attachment, 28 x 30 mm	07946–1870100	Water pump bearing
Holder plate	07HGB–001010B	Clutch center lock nut
Holder collars	07HGB-001020B	Clutch center lock nut
Fork seal driver, 39 mm	07947–4630100	Fork oil seal
Fork damper holder	07930-KA50100	Left fork socket bolt
Ball race remover	07948–4630100	Stem bearing race
Bearing driver	07946–KA50000	Swingarm pivot bearing
Bearing remover	07946–MJ0A100	Shock link needle bearing
		Swingarm link bearing
		Shock absorber bearing
Snap ring pliers	07914–SA50001	Master cylinder snap ring
Flywheel holder	07AMB-NN4A100	Flywheel
Flywheel puller w/thread protector	07AMC-NN4A100	Flywheel
Thread protector, 18 x1.5 mm ONLY	07AMC-NN4A110	Flywheel
Holder handle	07TMB-001010A	Right fork
Damper holder attachment, 4 pin	07AMB-NN4A200	Right fork
Compressor attachment	07959–MB10000	Shock absorber spring
Steering stem driver	07946-MB00000	Stem lower bearing
Steering stem driver attachment	07946-KA6000A	Stem lower bearing
Steering stem driver attachment	07953-MJ1000B	Stem bearing race
Holder attachment, 4 pin	07AMB-NN4200	Right fork center bolt
Bearing remover, 15 mm	07936-KC10500	Clutch cover bearing
Valve guide driver	07HMD-ML00101	Valve guide
Valve guide reamer, 4.5 mm	07HMH-ML0010B	Valve guide
Tensioner holder	07AMG-001A100	Tensioner holder
Driver attachement	07946-GC4000A	Shock absorber bearing
Tappet Wrench, 3 mm	07908-KE90200	Valve adjustment
Valve spring compressor attachment	07959-KM30101	Valve spring
PGM-FI warning unit assembly	07AMZ-NN4A100	PGM-FI troubleshooting
Diagnostic tool adapter	070MZ-K530101	PGM-FI Self-diagnosis system
Diagnostic tool (DST)	Generic tool	PGM-FI Self-diagnosis system

Tools
Common

Description	Tool number	Applicability
Spoke nipple wrench	07701–0020300	Front spoke nipple
Gear holder, 2.5	07724–001A100	Primary drive gear bolt
Bearing remover head, 20 mm	07746–0050600	Wheel bearing
Bearing remover shaft	07746–0050100	Wheel bearing
Driver	07749–0010000	Bearing removal/installation
Attachment, 24 x 26 mm	07746–0010700	Swingarm pivot bearing
Attachment, 32 x 35 mm	07746–0010100	Right countershaft bearing
		Left mainshaft bearing
Attachment, 37 x 40 mm	07746–0010200	Left shift drum bearing
Attachment, 42 x 47 mm	07746–0010300	Right mainshaft bearing
		Left countershaft bearing
		Right shift drum bearing
		Wheel bearing
		Ball race
Attachment, 52 x 55 mm	07746–0010400	Crankshaft oil seal
Attachment, 62 x 68 mm	07746–0010500	Left crankshaft bearing
Attachment, 72 x 75 mm	07746–0010600	Right crankshaft bearing
Pilot, 12 mm	07746–0040200	Water pump bearing
Pilot, 17 mm	07746–0040400	Right countershaft bearing
		Left mainshaft bearing
Pilot, 20 mm	07746–0040500	Left countershaft bearing
		Wheel bearing
		Swingarm pivot bearing
Pilot, 22 mm	07746–0041000	Right mainshaft bearing
Pilot, 25 mm	07746–0040600	Right shift drum bearing
Pilot, 30 mm	07746–0040700	Right crankshaft bearing
Pin spanner	07702-0020001	Steering stem nut torque
Shock absorber compressor	07GME-001000A	Shock absorber spring
Universal holder	07725-0030000	Drive sprocket holder
Pilot, 15 mm	07746-0040300	Clutch cover needle bearing
Attachment, 22 x 24 mm	07746-001A800	Shock absorber bearing
		Clutch cover needle bearing
Spanner “A”	89201-KA4-811	Shock spring adjuster
Spanner “B”	89202-KA4-811	Shock spring adjuster
Valve spring compressor	07757-0010000	Valve spring
Fuel pressure gauge, 0 -100 psi	07406-004000C	Fuel pressure inspection
Adapter, fuel pressure	07406-004030A	Fuel pressure inspection
Banjo bolt, 12 mm	90008-PP4-E02	Fuel pressure inspection

Lubrication & Seal Points

Engine

Item	Material	Remarks
Crankcase sealing bolt threads and seating surface	Repsol 4T-stroke engine oil	
Cylinder bore inner surface		
Cylinder head nut threads and seating surface		
Piston pin bore and outer surface		
Piston pin outer surface		
Piston ring surface		
Crankshaft oil seal lips		
Decompressor weight sliding surface		
Valve adjusting nut threads		
Oil pump rotor sliding surface		
Clutch outer sliding surface		
Clutch friction disc surface		
Clutch center nut threads and seating surface		
Clutch lifter piece needle bearing area		
Primary drive gear bolt threads and seating surface		
Shift drum grooves		
Gearshift spindle serration		
Flywheel nut threads and seating surface		
Each bearing		
Each O-ring		
Crankcase inside (transmission oil)	REPSOL MOTO TRANSMISSION (75W) ELF HTX740 (75W)	570 cm^3
Crankcase inside (engine oil)	Repsol 4T-stroke engine oil 10W-30 or equivalent	600 cm^3

Item	Material	Remarks
Connecting rod small end I.D.	Molybdenum oil solution (A 50/50 mixture of molybdenum disulfide grease and engine oil	
Connecting rod big end		
Camshaft outer surface		
Rocker arm I.D.		
Valve stem sliding surface		
Valve stem end sliding surface		
Clutch outer collar sliding surface		
Mainshaft spline and gear sliding surface		
Countershaft spline and gear sliding surface		
Shift fork I.D. and gear contact area		
Shift fork shaft surface		
Kickstarter spindle spline area and gear sliding surface		
Each gear		
Right crankshaft bearing set plate bolt threads	Locking agent	6.5 ± 1 mm
Right mainshaft bearing/shift drum bearing set plate bolt threads		
Left coutershaft bearing set plate bolt threads		3.5 ± 1 mm
Left crankcase sealing bolt threads		
Cylinder mounting bolt threads		
Cylinder head sealing bolt threads		6.5 ± 1 mm
Cam chain tensioner bolt threads		
Shift drum center bolt threads		
Ignition pulse generator bolt threads		
Stator mounting bolt threads		

Item	Material	Remarks
Clutch slave cylinder piston/O-ring	Silicone grease	
Left crankcase cover cap threads	Lithium based multipurpose grease	
Each oil seal lips		
Water seal lips		
Right crankcase and cylinder head cover water hose joint thread	Sealant	
Cylinder head cover mating surface	Three Bond 1207B or equivalent	
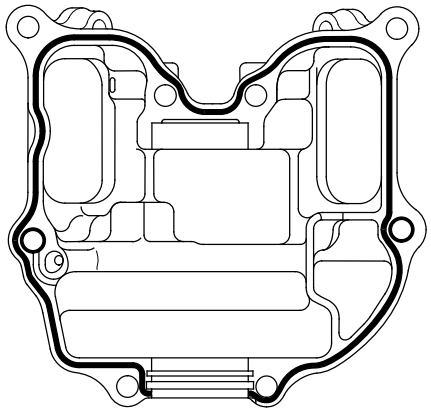		

Cam chain tensioner bolt

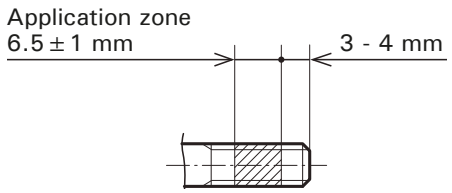

Left crankcase drain hole #225

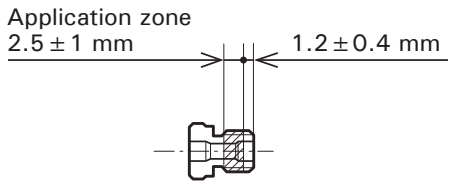

Left crankcase drain hole #225

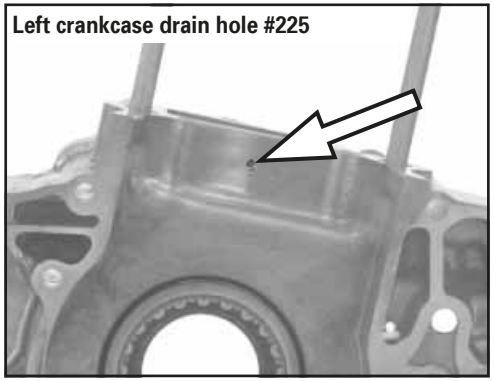

Frame

Item	Material	Remarks
Steering head bearing race and bearings	Multi-purpose grease	
Steering head dust seal lips		
Swingarm pivot needle bearing		
Swingarm pivot dust seal lips		
Shock link/shock arm needle bearings		
Shock link/shock arm dust seal lips		
Kickstarter arm joint sliding		
Brake lever pivot sliding surface		
Side stand pivot sliding surface		
Brake pedal pivot sliding surface		
Chain tensioner roller bearings		
Clutch lever pivot sliding surface		
Front and rear wheel axle thread		
Step joint pin surface		
Throttle pipe sliding surface and throttle wire drum	4-stroke engine oil	
Brake hydraulic system inside	DOT 4 brake fluid	
Clutch hydraulic system inside		
Air cleaner element	Engine oil	
Throttle cable sliding surface	Cable lubricant	
Handlebar grip	Honda bond A or equivalent	

Item	Material	Remarks
Drive chain adjuster stopper screws threads	Locking agent	
Side stand bracket bolt threads		
Drive chain slider mounting screw threads		
Rear brake hose clamp screw threads		
Cooling fan screws threads		

Cable & Harness Routing

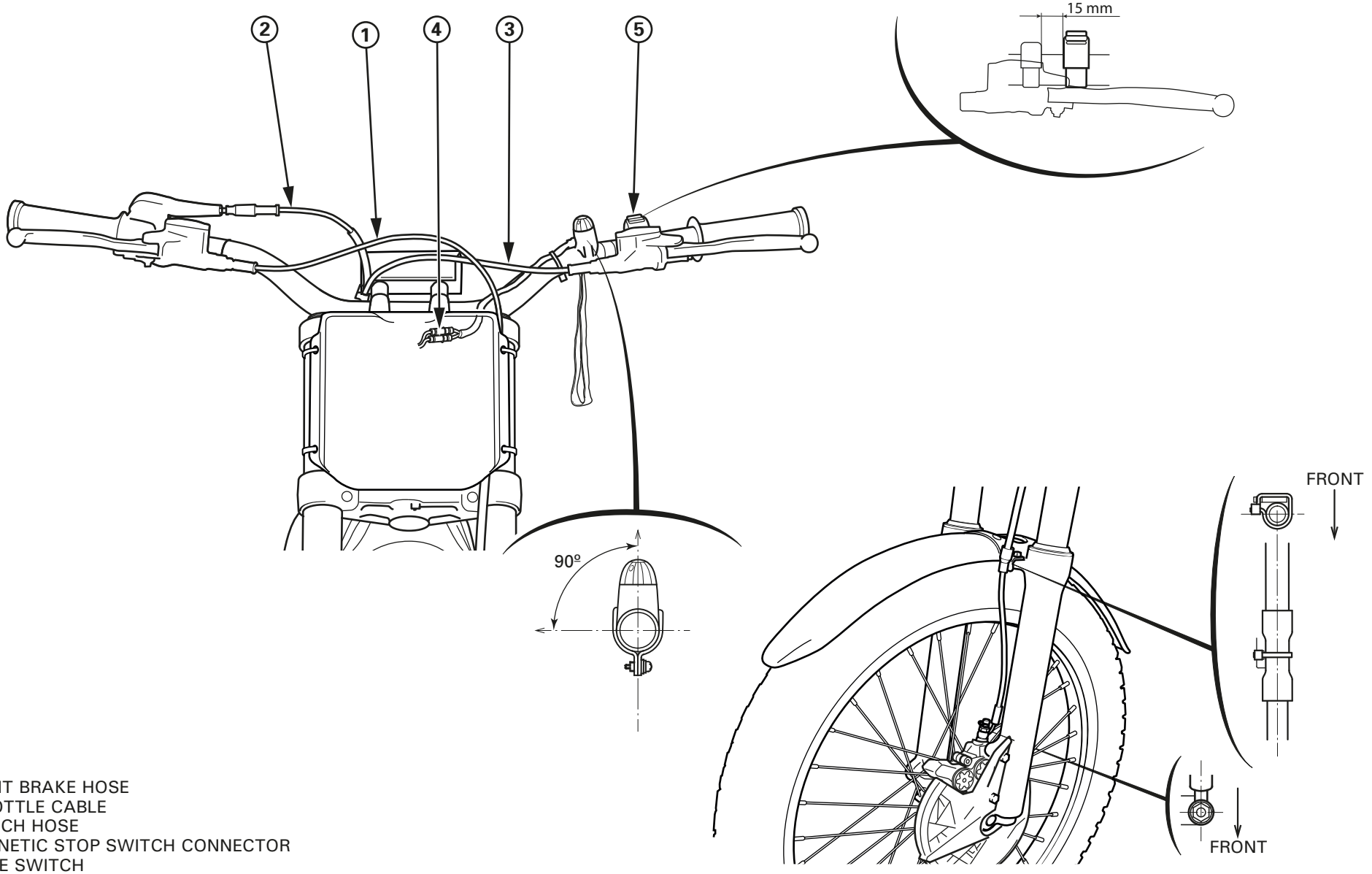

(1) FRONT BRAKE HOSE
(2) THROTTLE CABLE
(3) CLUTCH HOSE
(4) MAGNETIC STOP SWITCH CONNECTOR
(5) MODE SWITCH

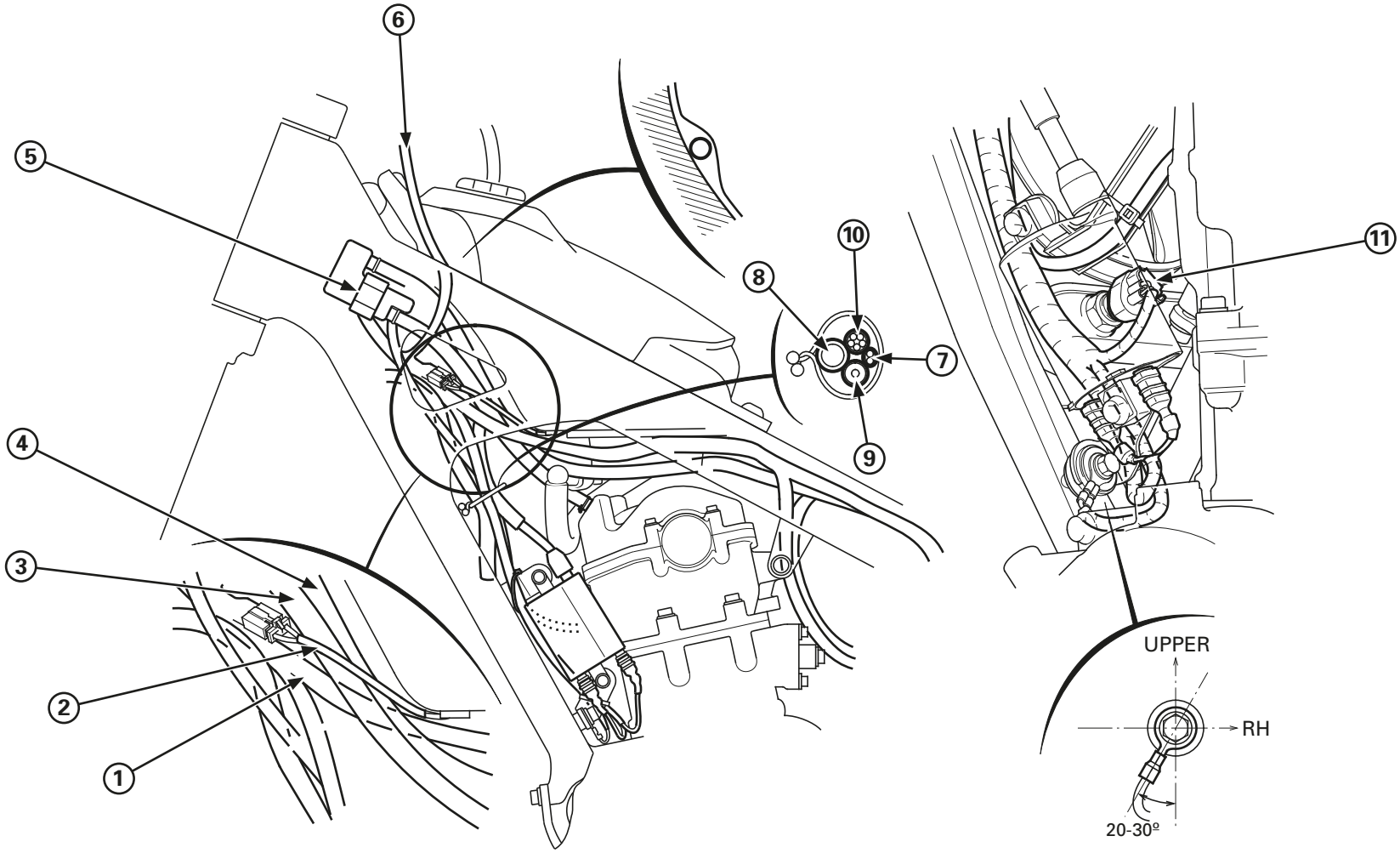

(1) MAIN WIRE HARNESS
(2) FUEL PUMP WIRE
(3) CYLINDER HEAD BREATHER HOSE
(4) AIR FILTER BOX BREATHER HOSE
(5) STORAGE TANK
(6) ENGINE STOP SWITCH WIRE
(7) FAN MOTOR WIRE
(8) FUEL CAP BREATHER HOSE
(9) SPARK PLUG WIRE
(10) WIRE HARNESS (TO IGNITION COIL)
(11) ECT SENSOR

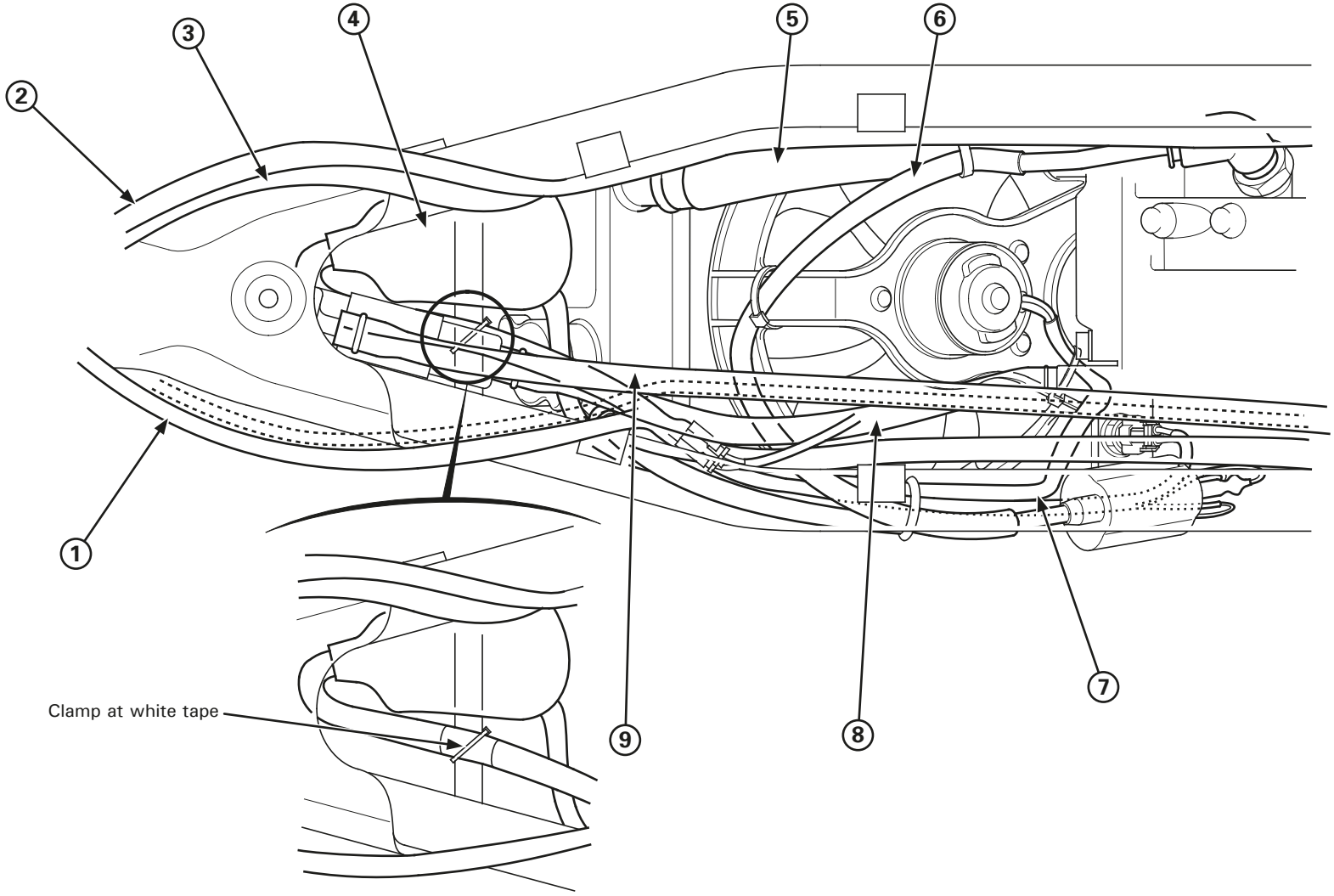

(1) WIRE HARNESS
(2) THROTTLE CABLE
(3) CLUTCH HOSE
(4) CONNECTOR BOOT
– FAN MOTOR 2P (BLACK) CONNECTOR
– POWER / MAPPING CONNECTOR
(5) UPPER RADIATOR HOSE
(6) SPARK PLUG WIRE
(7) FAN MOTOR WIRE
(8) FILTER BOX BREATHER HOSE
(9) CYLINDER HEAD BREATHER HOSE

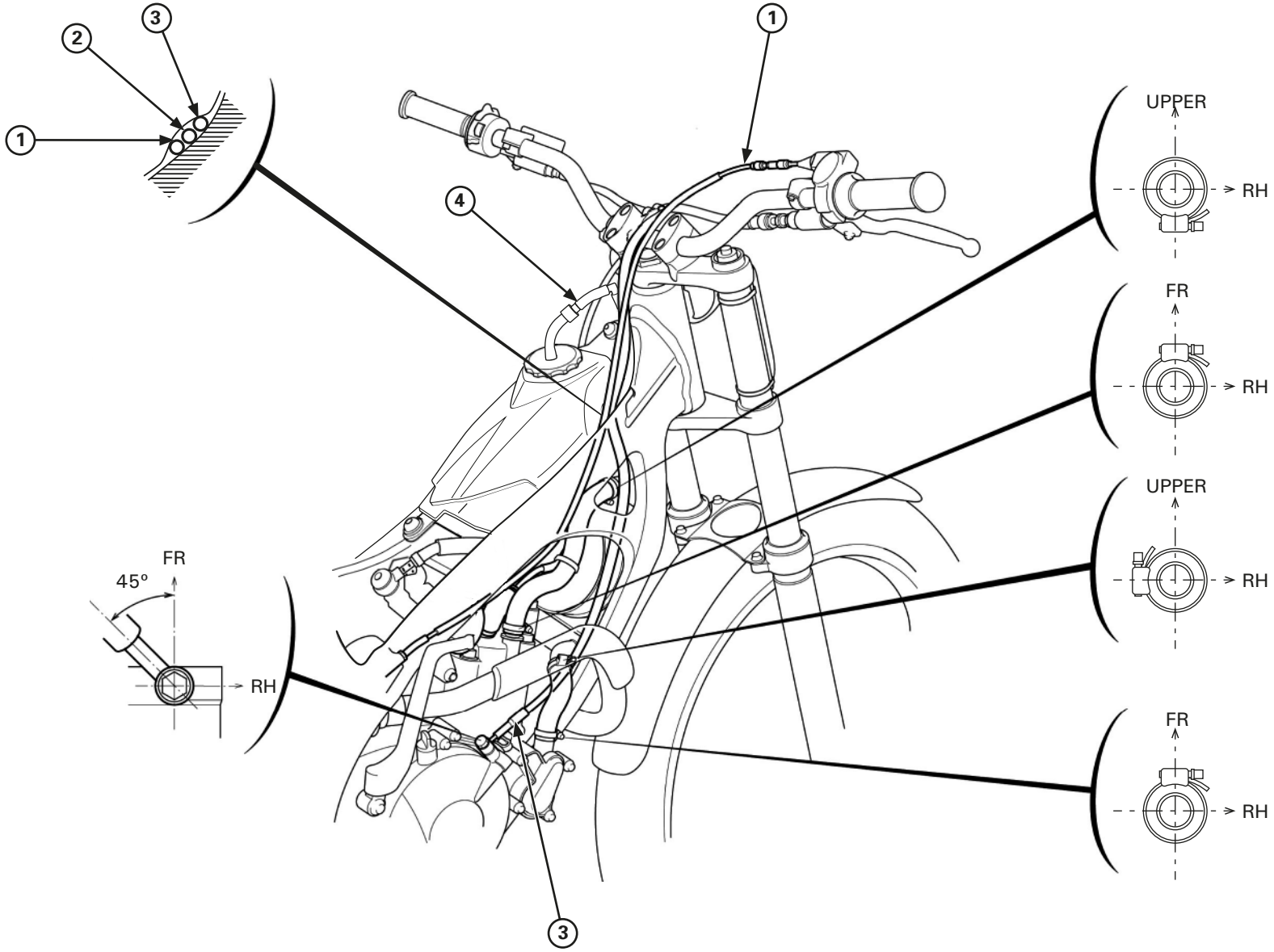

(1) THROTTLE CABLE
(2) CLUTCH HOSE
(3) FUEL TANK BREATHER HOSE

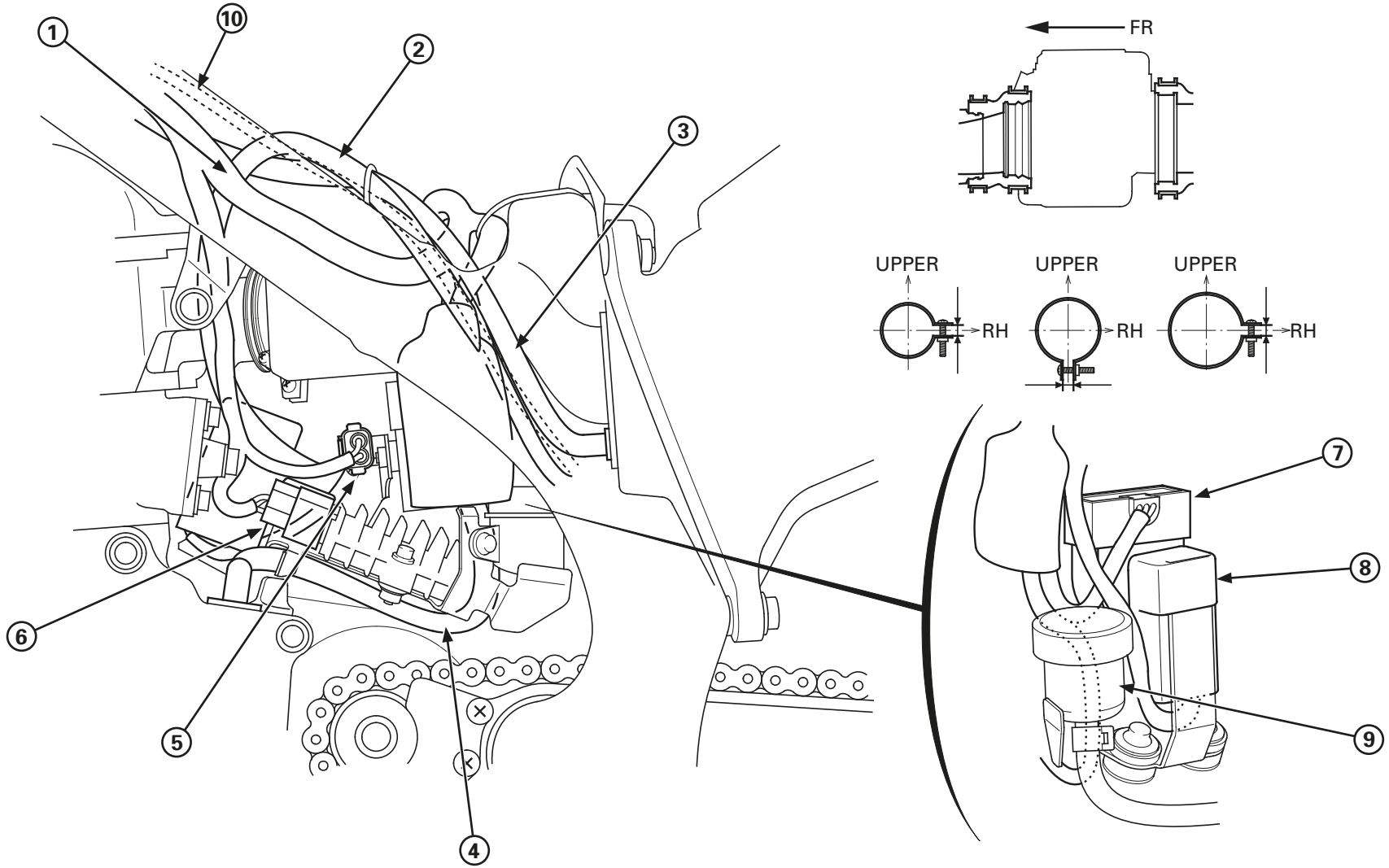

(1) MAIN WIRE HARNESS
(2) TRANSMISSION BREATHER HOSE
(3) FILTER BOX BREATHER HOSE
(4) ALTERNATOR WIRE
(5) CONDENSER 2P (BLACK) CONNECTOR
(6) REGULATOR/RECTIFIER 5P (BLACK) CONNECTOR
(7) BANK ANGLE SENSOR
(8) FAN MOTOR RELAY
(9) REAR BRAKE RESERVOIR TANK

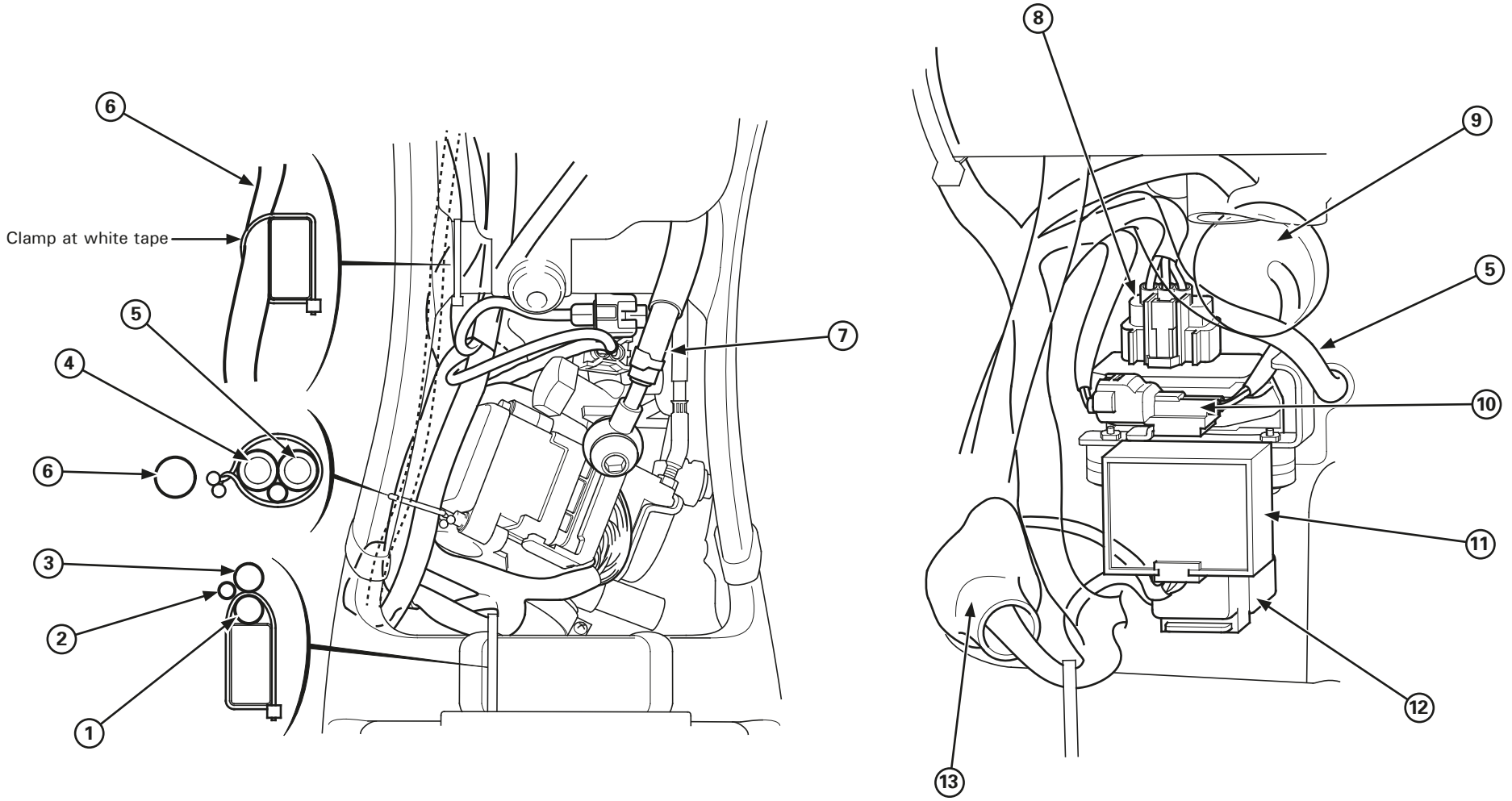

(1) MAIN WIRE HARNESS (TO CONNECTOR COVER)
(2) MAIN WIRE HARNESS (TO RELAY)
(3) MAIN WIRE HARNESS (TO ECU)
(4) AIR FILTER BOX BREATHER HOSE
(5) TRANSMISSION BREAHTER HOSE
(6) WIRE HARNESS
(7) FUEL FEED HOSE
(8) REGULATOR/RECTIFIER 5P (BLACK) CONNECTOR
(9) CONDENSOR
(10) CONDENSOR 2P (BLACK) CONNECTOR
(11) BANK ANGLE SENSOR
(12) FAN MOTOR RELAY
(13) CONNECTOR COVER

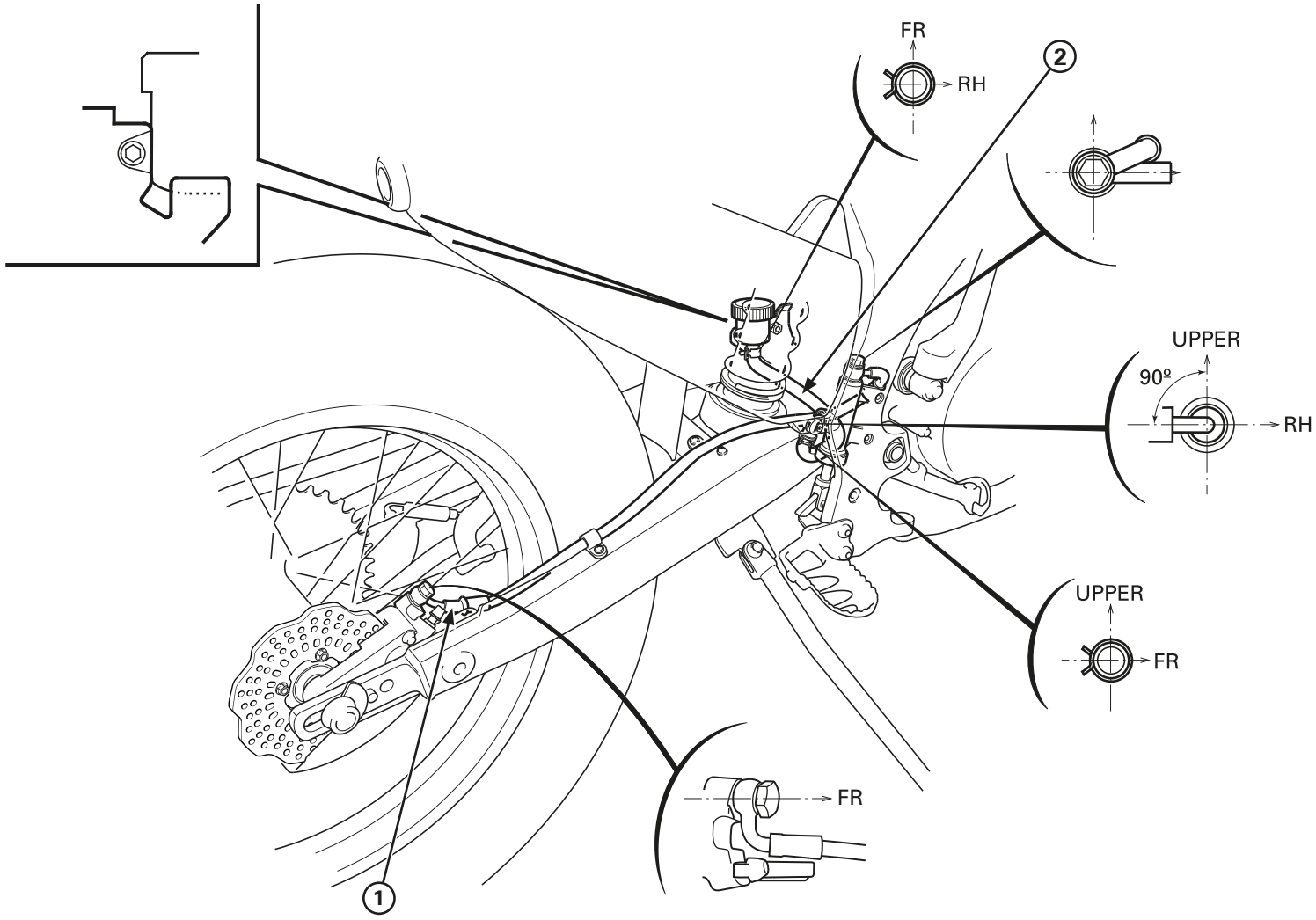

(1) REAR BRAKE HOSE
(2) REAR BRAKE RESERVOIR HOSE

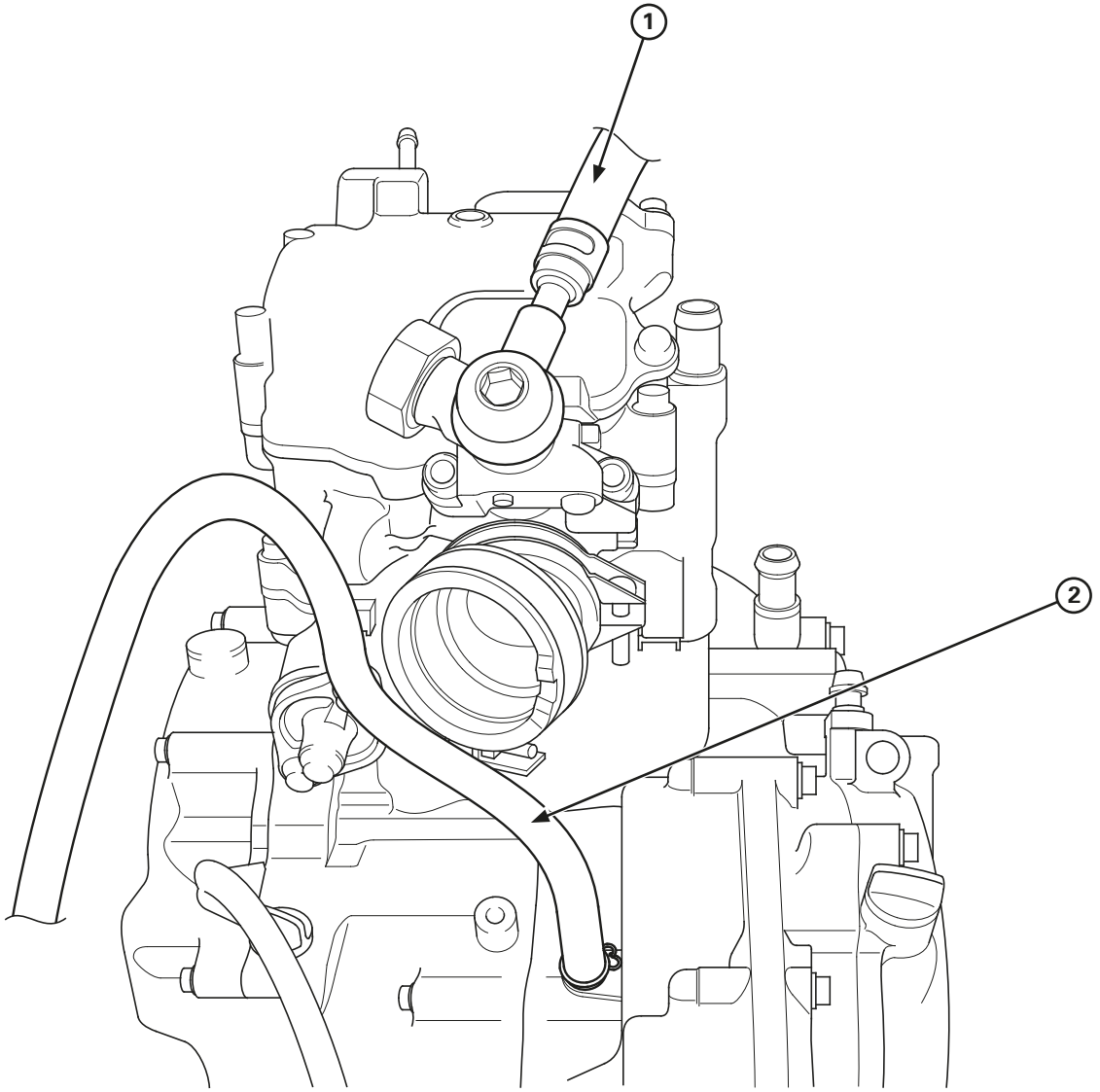

(1) FUEL FEED HOSE
(2) TRANSMISSION BREATHER HOSE

Maintenance schedule

Perform pre-ride Inspection at each scheduled maintenance period.
I: Inspect and clean, Adjust, Lubricate or Replacement if necessary. **C:** Clean, **R:** Replace, **L:** Lubricate.

Item \ Frequency	Each race or about 2.5 hr	Every 6 races or about 15 hr	Every 6 months	Every 12 months	Remarks
Fuel Line	I				
Fuel Filter				I	
Clean Under Front Fender			I		
Throttle Operation	I				
Air Cleaner	C				Check the air cleaner after riding in dusty areas.
Spark Plug	I	R			
Valve Clearance			I		I: After the first brake-in period
Engine Oil	I	R			R: After the first brake-in period
Engine Oil Filter		R			R: After the first brake-in period
Engine Oil Strainer Screen		I			
Engine Idle Speed	I				
Transmission Oil		R			
Radiator Coolant	I			R	
Cooling System	I			R	
Piston		I		R	
Piston Ring		I	R		
Drive Chain	I, L				
Drive Chain Slider/Tensioner	I				
Drive/Driven Sprocket	I				
Brake Fluid	I		R		
Brake Pad Wear	I				
Brake System	I				
Clutch Fluid	I				
Clutch System	I				
Control Cables	I, L				
Exhaust Pipe/Muffler	I	C			
Suspension	I	C			Check the spherical bearing for damage.
Shock absorber (nitrogen pressure)			I		
Swingarm/Shock Linkage	I	C			
Fork Oil	I		R		
Wheels/Tires	I				
Steering Head Bearing	I				
Nuts, Bolts, Fasteners	I				

Pre-ride Inspection

For your safety, it is very important to take a few moments before each ride to walk around your COTA 301RR and check its condition.

⚠ WARNING

Improperly maintaining this COTA 301RR or failing to correct a problem before riding can cause a crash in which you can be seriously hurt or killed.

Always perform a Pre-ride and Pre-race inspection before every ride and correct any problems.

Check the following items before you get on the COTA 301RR:

- Fuel, oil, and water for leaks
- Coolant for proper level
- Spark plug for proper heat range, carbon fouling, and spark plug cap terminals for looseness
- Clutch operation
- Steering head bearings and related parts for condition
- Damaged or distorted frame
- Throttle grip and throttle valve operation
- Tires for damage and proper inflation pressure
- Front and rear suspension for proper operation
- Front and rear brakes, for proper operation
- Drive chain for correct slack and adequate lubrication
- Drive chain slider and roller for damage or wear
- Loose bolts, screws, and other fasteners

Warming-up Inspection

When warming-up the engine, check for the following:
- Do not rev the engine more than necessary or engine damage may result.
- Check for fuel, oil, and water leaks
- Warm up the engine for a few minutes until it is heated to the operating temperature until the engine responds to the throttle smoothly.

Ride Inspection

When running the Cota, check the following:
- Control system
- Brake stopping power

After Ride Inspection

After riding the Cota, check for the following:
- Color condition of piston head and spark plug
- Signs of detonation
- Fuel, oil, and water leaks
- Loose or missing bolts and nuts

Replacement Parts

Parts Requiring Periodic Replacement

Item	Replacement Interval	Cause
Engine		
Spark plug/plug cap	Every 6 races	Contamination or emulsification
Engine oil	Every 6 races	
Engine oil filter	Every 6 races	
Transmission oil	Every 6 races	
Piston	Every year	Damage or wear at skirt
Piston ring	Every half a year	Damage at ends or wear
Radiator coolant	Every year	
Frame		
Front fork fluid	Every half a year	

Fast wearing/expendable parts

Item	Cause
Engine	
Clutch disc	Wear or discoloration
Clutch spring	Fatigue
Drive sprocket	Wear or damage
Frame	
Front/rear tire	Wear
Brake pad	Wear
Chain slider	Wear
Driven sprocket	Wear or damage
Drive chain	Elongation or wear

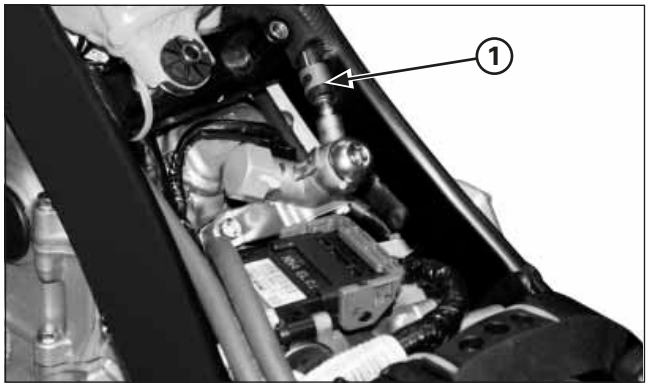

(1) FUEL FEED HOSE

Fuel Line

Remove the rear fender.

Check the fuel feed hose for cracks, deterioration, or leakage.

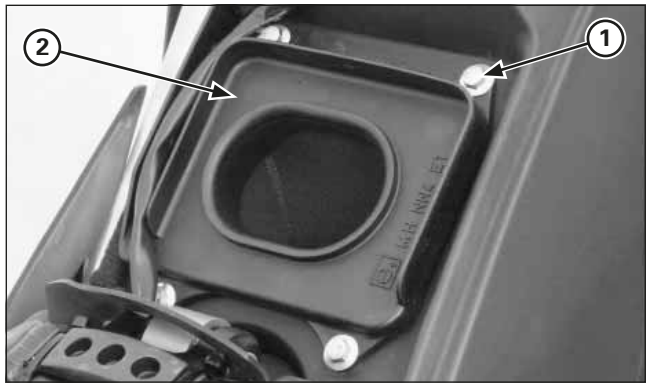

(1) BOLTS
(2) AIR CLEANER HOUSING COVER

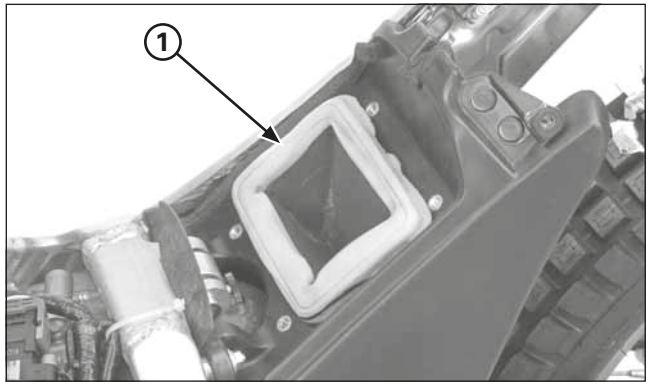

(1) AIR CLEANER ELEMENT

Air Cleaner

Remove the rear fender.
Remove the four bolts and air cleaner housing cover.

Remove the air cleaner element assembly from the air cleaner housing.

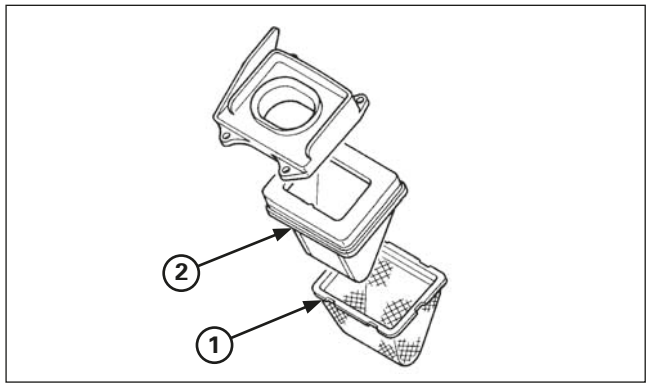

(1) FLAME TRAP
(2) AIR CLEANER ELEMENT

Remove the flame trap from the air cleaner element.
Check the frame trap for damage, replace if necessary.

Thoroughly wash the element in clean non-flammable cleaning solvent, then wash in a solution of hot water and dish-washing liquid soap.
Apply engine oil to the element, and squeeze out excess oil.
Clean the inside of the air cleaner housing.

⚠ WARNING

Never use gasoline or low flash point solvents for cleaning the air cleaner element.

A fire or explosion could result in serious injury or death.

NOTICE

Do not twist the element to squeeze out the excess. Failure to follow this precaution can result in a damaged element.

Installation is in the reverse order of removal.

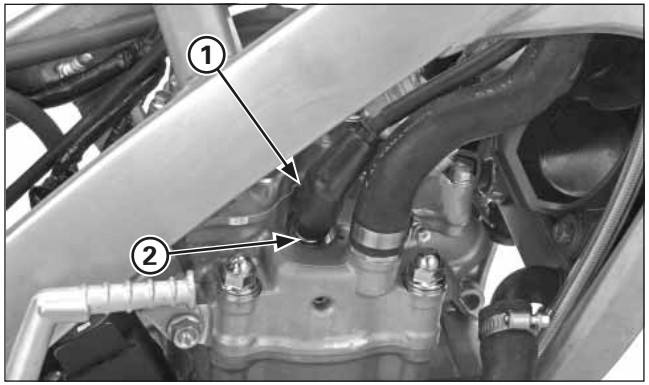

(1) SPARK PLUG CAP / SPARK PLUG

Spark Plug

Using a spark plug with the wrong heat range can damage the engine or cause the plug to foul. Be careful to select the correct spark plug for the conditions.

Standard plug: NGK: CR6EH-9

Plug Gap

Remove the spark plug and measure the spark plug gap.

Standard: 0.8 – 0.9 mm (0.031 – 0.035 in)

Replace the spark plug if the spark plug gap is out of specification.
Install and tighten the spark plug.

Torque: 16 N•m (1.6 kgf•m, 12 lbf•ft)

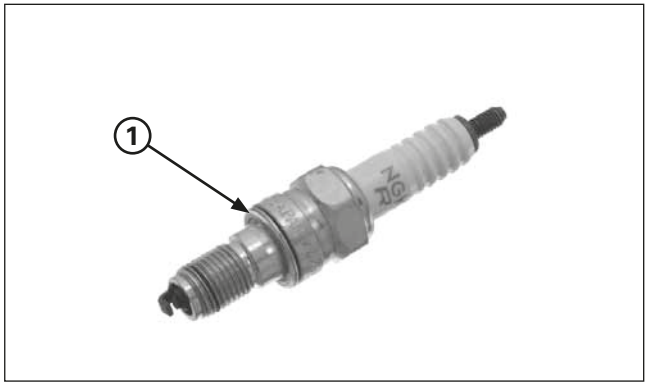

(1) INSULATOR

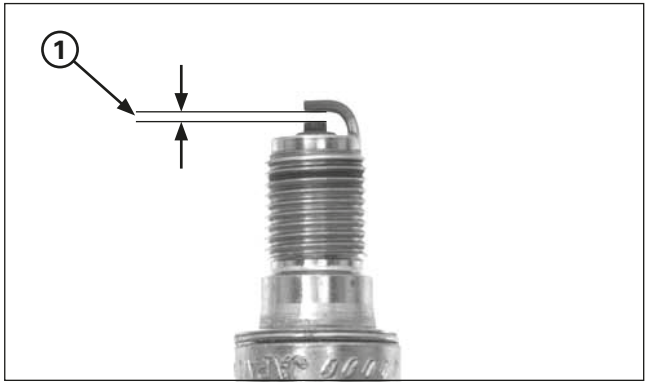

(1) SPARK PLUG GAP

Arcing

If engine misfire occurs due to arcing, replace both the spark plug and the cap.

Spark Plug Cap

Remove the spark plug cap from the spark plug.
Clean the inside of the plug cap with electrical contact cleaner to prevent misfire.

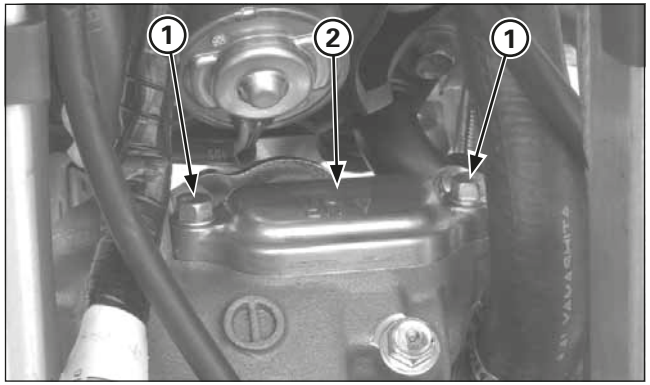

(1) BOLTS
(2) TAPPET ADJUSTING HOLE COVER

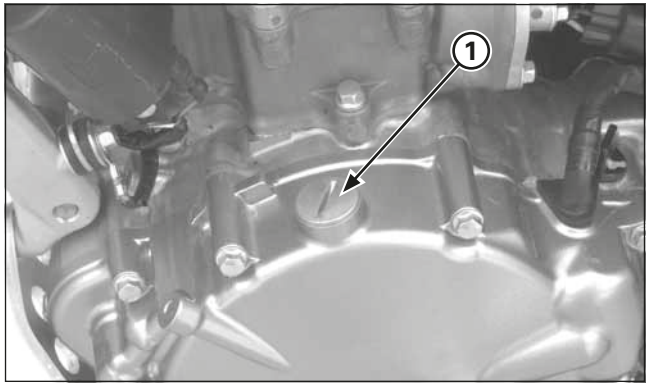

(1) TIMING HOLE CAP/O-RING

Valve Clearance

Inspection

Inspect and adjust the valve clearance while the engine is cold (below 35˚C/95˚F).

Remove the fuel tank/injector assembly.
Remove the bolts and tappet adjusting hole covers from the cylinder head cover.
Remove the timing hole cap and O-ring.

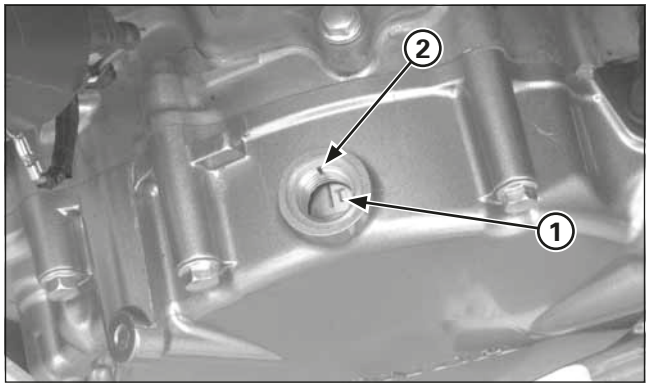

(1) "T" MARK
(2) INDEX MARK

Operate the kickstarter pedal and align the "T" mark on the flywheel with the index mark on the left crankcase cover.

Make sure the piston is at TDC (Top Dead Center) on the stroke by moving the rocker arms.

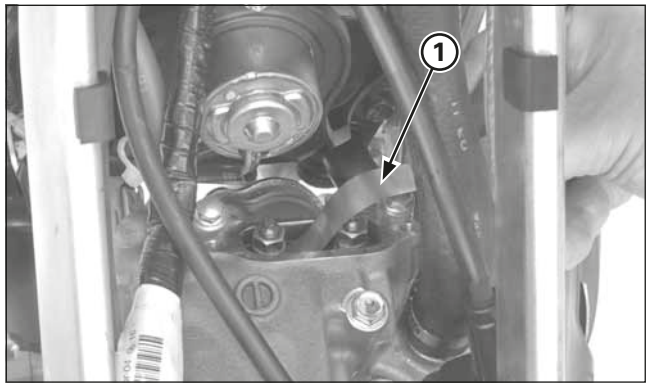

(1) FEELER GAUGE

Insert a feeler gauge between the rocker arm and valve stem and measure the intake and exhaust valve clearances.

Valve clearance:
Intake: 0.12 ± 0.03 mm (0.005 ± 0.001 in)
Exhaust: 0.30 ± 0.03 mm (0.012 ± 0.001 in)

Adjust by loosening the lock nut and turning the adjusting screw until there is a slight drag on a feeler gauge.

Tools:
Valve adjusting wrench, 10x12 mm (0.39x0.47 in) (equivalent commercially available)
Tappet wrench, 3 mm (0.118 in) 07908-KE90200

After adjustment, tighten the lock nut while holding the adjusting screw.
Recheck the valve clearance.

Torque: 14 N•m (1.4 kgf•m, 10.3 lbf•ft)

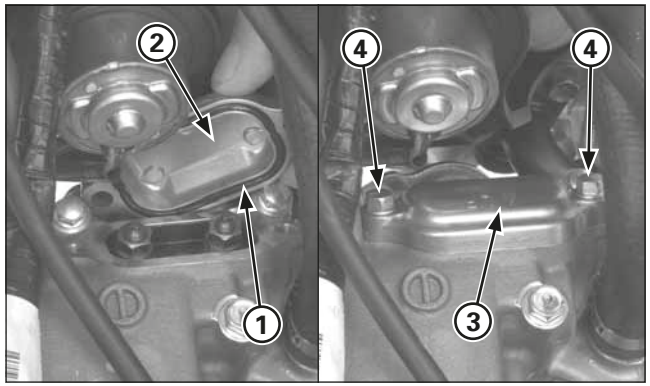

(1) O-RING
(2) VALVE ADJUSTING HOLE COVER
(3) "UP" MARK (4) BOLTS

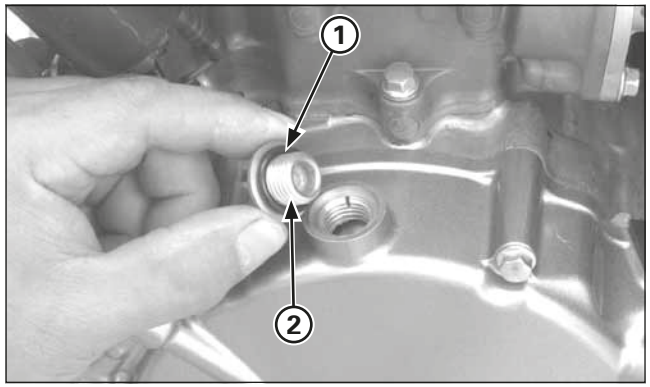

(1) O-RING
(2) TIMING HOLE CAP

Check that the valve adjusting hole cover O-ring is in good condition, replace if necessary.
Coat the O-rings with clean engine oil and install them in the valve adjusting hole cover grooves.
Install the valve adjusting hole cover with their "UP" mark facing up and then install and tighten the bolts securely.

Check the timing hole cap O-ring is in good condition, replace if necessary.
Install and tighten the timing hole cap.

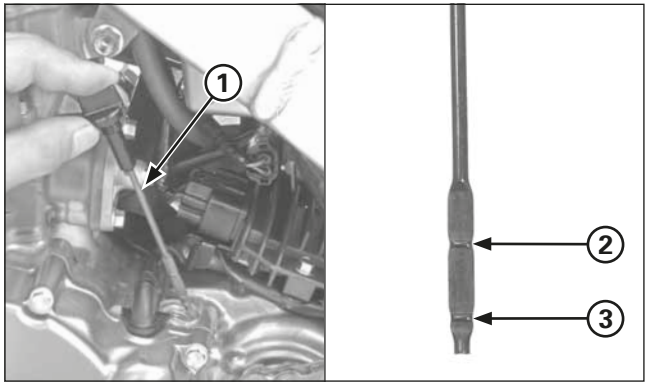

(1) OIL FILLER CAP/DIPSTICK
(2) UPPER LEVEL LINE
(3) LOWER LEVEL LINE

Engine Oil/Oil Filter

Oil Level Inspection

Start the engine and let it idle for a 3 minutes.
Stop the engine and wait 3 minutes.
Support the motorcycle upright on a level surface.

Remove the oil filler cap/dipstick on left crankcase and wipe the oil with a clean cloth.
Insert the dipstick without screwing it in, remove it and check the oil level.

If the oil level is below or near the lower level line on the dipstick, add the recommended engine oil to the upper level line through the oil filler hole.

Specified engine oil:
Repsol 4T motorcycle oil (10W-30) or equivalent

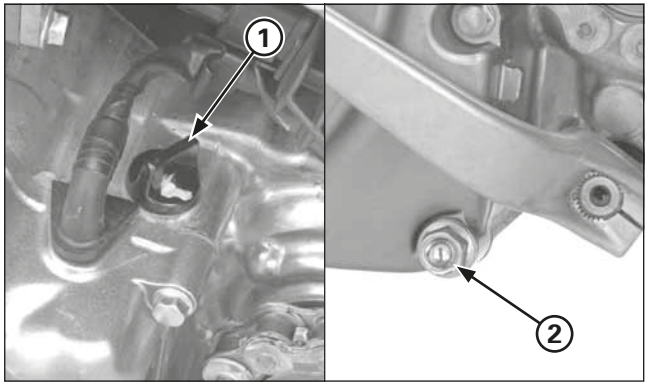

(1) OIL FILLER CAP/DIPSTICK
(2) DRAIN BOLT/SEALING WASHER

Oil Change

Change the engine oil with the engine warm.
Support the motorcycle with it side stand.
Remove the bolts and skid plate.
1. Remove the oil filler cap/dipstick.
2. Place an oil drain pan under the engine and remove the drain bolt on the left crankcase cover.
3. After the oil has completely drained, make sure that the sealing washer is in good condition and reinstall the drain bolt. Tighten the drain bolt to the specified torque.

Torque: 22 N•m (2.2 kgf•m, 16 lbf•ft)

4. Pour recommended engine oil slowly through the oil filler hole.

Specified engine oil:
Repsol 4T motorcycle oil (10W-30) or equivalent

Capacity: 0.41 liter (0.43 US qt, 0.36 Imp qt) after draining
0.44 liter (0.46 US qt, 0.39 Imp qt) after oil filter change
0.60 liter (0.63 US qt, 0.53 Imp qt) after disassembly

Install the oil filler cap/dipstick.

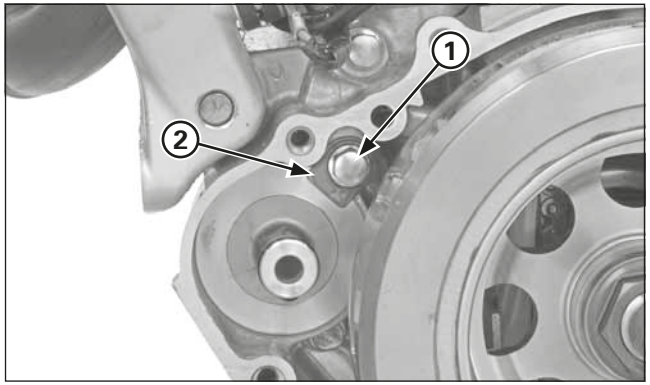

(1) BOLT
(2) RETAINING PLATE

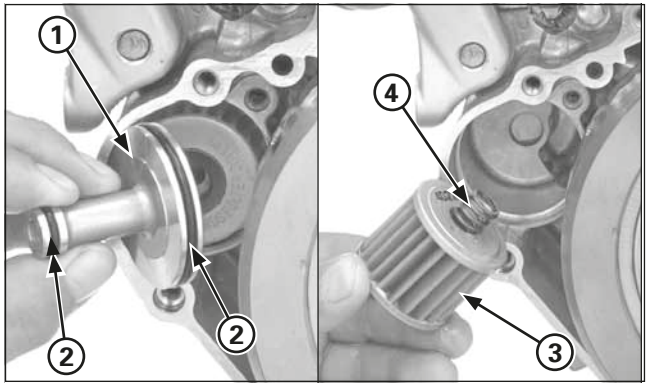

(1) OIL FILTER COVER
(2) O-RINGS
(3) OIL FILTER
(4) SPRING

Oil Filter Change

Remove the left crankcase cover (page 4-49).

Remove the oil filter cover retaining plate bolt and plate.
Remove the oil filter cover and O-rings.

Remove the oil filter and spring.

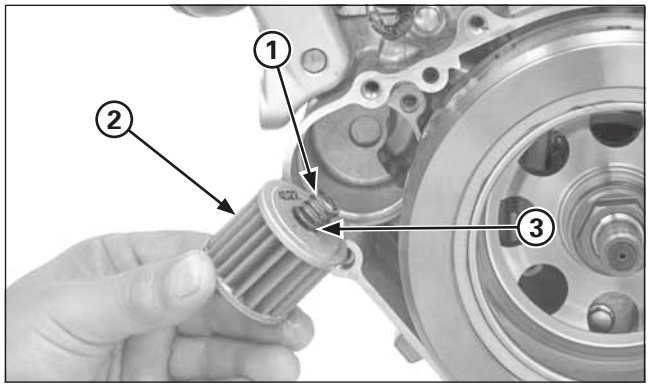

(1) SPRING
(2) OIL FILTER
(3) APPLY GREASE

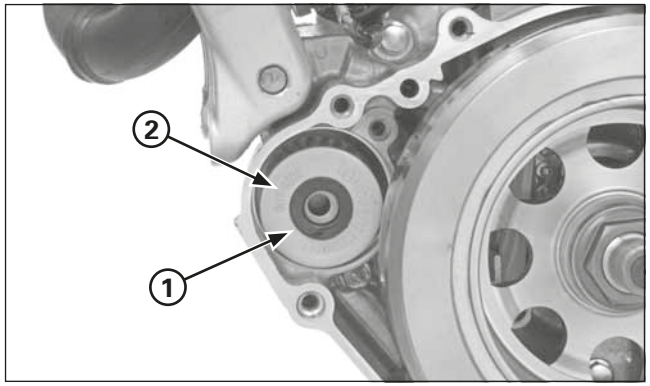

(1) OIL FILTER
(2) "OUTSIDE" MARK

Apply grease to the oil filter spring end (filter side).
Install the spring into the new oil filter.

Install the new oil filter into the left crankcase with its "OUTSIDE" mark facing out.

Installing the oil filter backwards will result in severe engine damage.

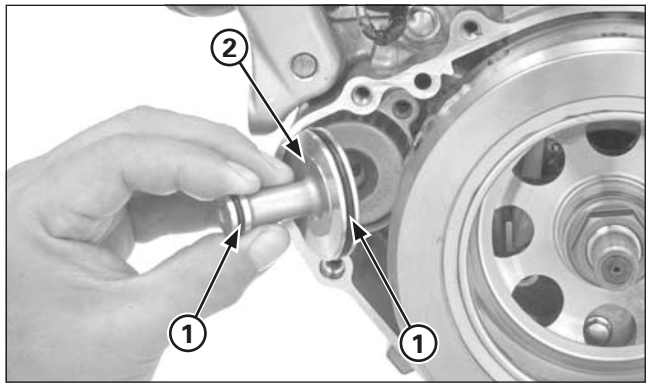

(1) NEW O-RINGS
(2) OIL FILTER COVER

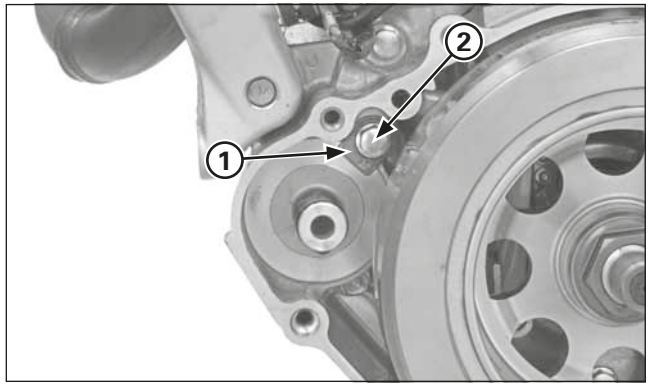

(1) RETAINING PLATE
(2) BOLT

Install new O-rings into the oil filter cover grooves.

Install the oil filter cover into the left crankcase while aligning the cover flange with the oil filter groove.
Make sure that the oil filter cover seats properly in the crankcase.

Install the retaining plate and tighten the bolt securely.

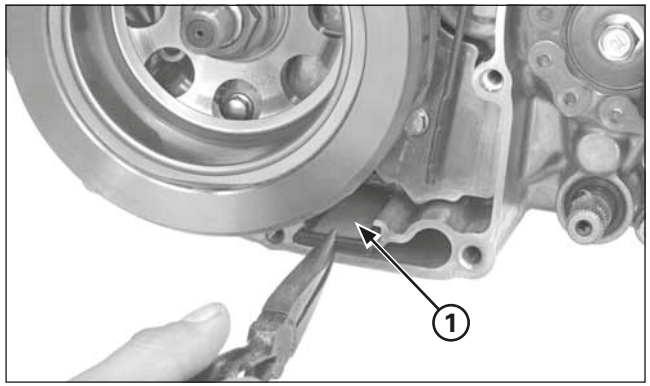

(1) OIL STRAINER SCREEN

Oil Strainer Screen Cleaning

Remove the oil strainer screen from the left crankcase groove.
Clean the strainer.
Reinstall the oil strainer screen.
Note the direction of the screen.

Install the left crankcase cover being careful not to damage the O-ring and oil seal.

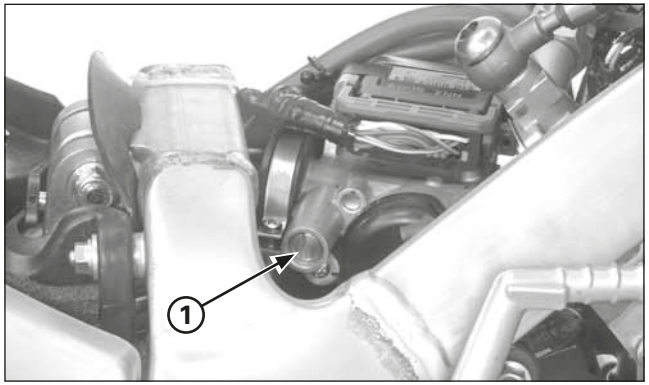

(1) IDLE SPEED ADJUSTMENT SCREW

Engine Idle Speed

Inspect and adjust the idle speed after all other engine adjustments are within specification.
The engine must be warm for an accurate idle inspection and adjustment.

Warm up the engine until the fan starts, shift the transmission into neutral, and hold the motorcycle in an upright position.
Connect a tachometer according to its manufacturer's operating instruction.

Idle speed: 1,800 ± 100 rpm

NOTICE

A low idling speed may cause starting problems.

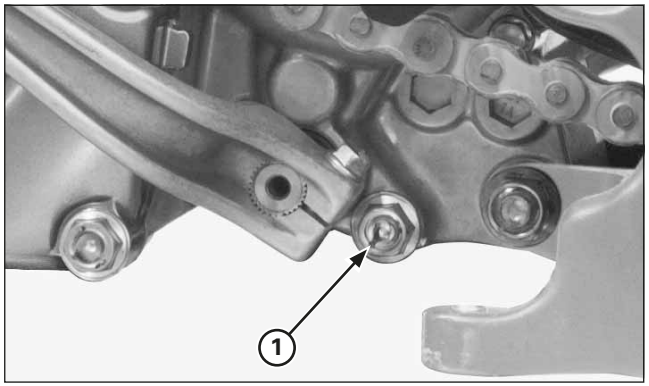

(1) DRAIN BOLT

Transmission Oil

Oil Change

- Transmission oil should be changed at least every six competitions to ensure consistent performance and maximum service life of both transmission and clutch components.
- Warm-up the engine before draining the oil. This will ensure complete and rapid draining.

Remove the bolts and skid plate.

1. Support the motorcycle in an upright position on level surface.
2. Remove the oil filler cap from the clutch cover.
3. Place an oil drain pan under the engine to catch the oil, then remove the drain bolt and sealing washer from the left crankcase.
4. After the oil has drained completely, install the drain bolt with a new sealing washer. Tighten the drain bolt to the specified torque.

Torque: 22 N•m (2.2 kgf•m, 16 lbf•ft)

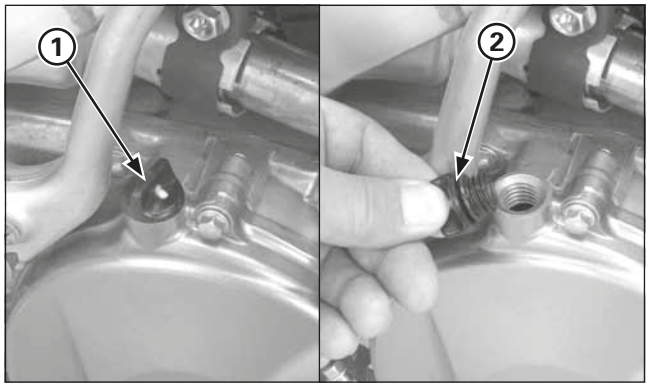

(1) FILLER CAP
(2) O-RING

5. Pour specified transmission oil.

Specified transmission oil: ELF HTX 740

Capacity: 0.54 liter (0.57 US qt, 0.48 Imp qt) after draining
0.57 liter (0.60 US qt, 0.50 Imp qt) after disassembly

Check the O-ring is in good condition, install the oil filler cap.

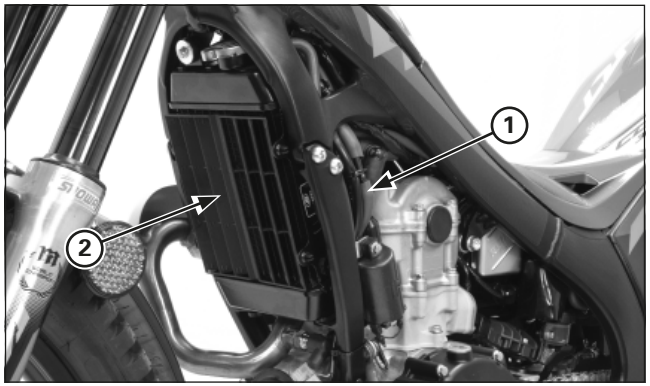

(1) OVERFLOW HOSE
(2) RADIATOR

Coolant

Cooling System Inspection

1. Check the cooling system for leaks.
2. Check water hoses for cracks, deterioration, and clamp bands for looseness.
3. Check the radiator mount for looseness.
4. Make sure the overflow hose is connected and not clogged.
5. Check radiator fins for obstructions or damage.

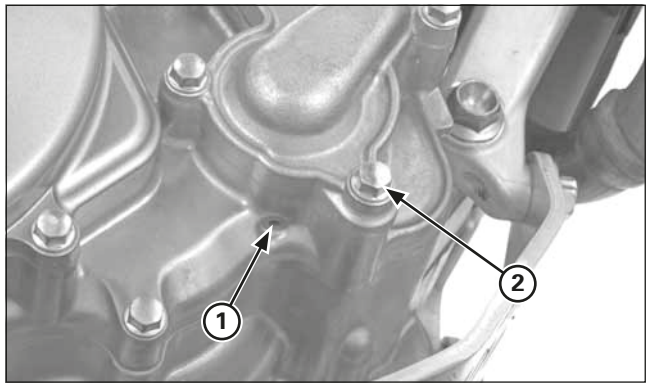

(1) INSPECTION HOLE
(2) COOLANT DRAIN BOLT/SEALING WASHER

6. Check the water pump inspection hole bottom of the water pump for leakage. Make sure the hole remains open.
   If water leaks through the check hole, the water seal is damaged. If oil leaks through the check hole, the oil seal is damaged.
   Replace the water seal or the oil seal (page 4-15).

Coolant Replacement

⚠ WARNING

Removing the radiator cap while the engine is hot will allow the coolant to spray out, seriously scalding you.

Always let the engine and radiator cool down before removing the radiator cap.

1. Remove the coolant drain bolt and sealing washer.

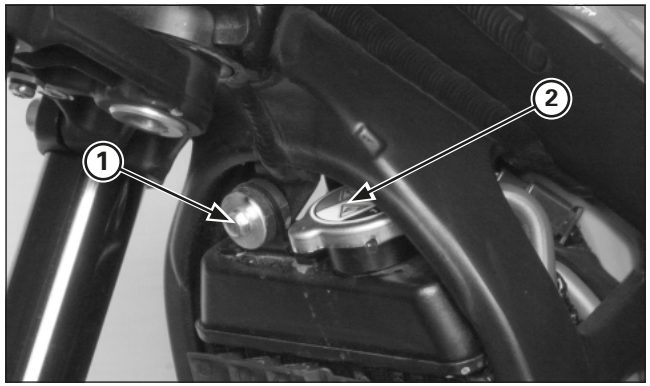

(1) BOLT
(2) RADIATOR CAP

2. Remove the radiator upper mounting bolt and move the radiator forward, then remove the radiator cap and drain the coolant.
3. Install the new sealing washer, drain bolt and tighten it to the specified torque.

Torque: 9.8 N•m (1.0 kgf•m, 7 lbf•ft)

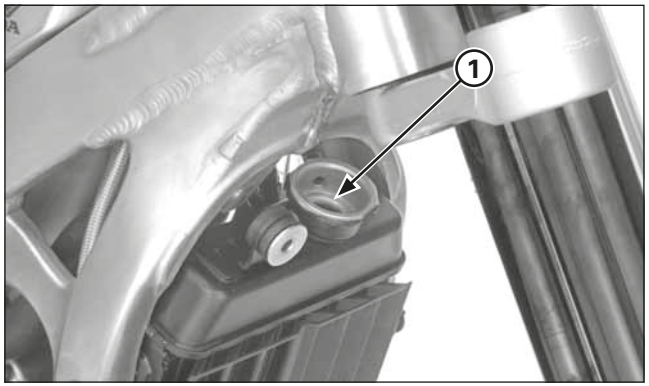

(1) FILLER NECK

4. Fill the radiator with coolant up to the filler neck.
5. Squeeze the radiator hoses alternately. If the coolant level drops, fill the coolant again.
6. Fill the radiator with coolant up to the filler neck.
7. After this first filling, start the engine, check the coolant level (page 1-2).

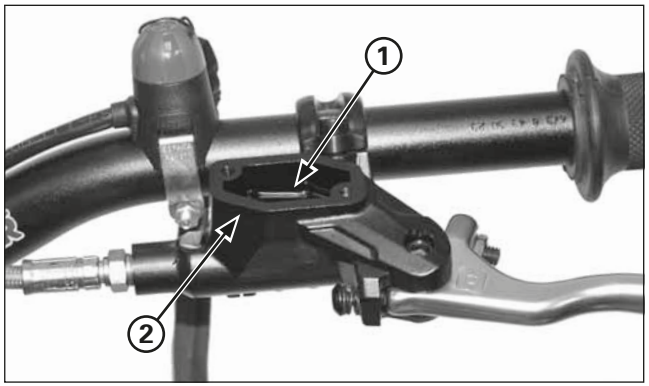

(1) CLUTCH FLUID RESERVOIR
(2) LOWER LEVEL LINE

Clutch System

System Inspection

1. Operate the clutch lever and check that no air has entered in the system. If the clutch is not disengaged properly, or the lever feels soft or spongy, bleed the air from the system.
2. Remove the reservoir cover and diaphragm, check the clutch fluid level. If the level is low, inspect the clutch hose and fittings for damage, deterioration, cracks or sign of leakage. Tighten any loose fittings. Replace hose and fittings as require.

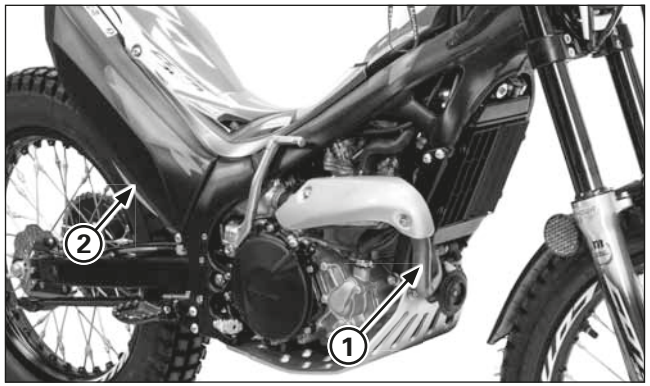

(1) EXHAUST PIPE
(2) MUFFLER

Exhaust Pipe And Muffler

Inspection

Check the muffler for clogging.
Check for loose or missing bolts and nuts.
Check the exhaust pipe and muffler for cracks or deformation.
Check the exhaust pipe gasket.
Check the muffler gasket.

Loss of power will result if the exhaust pipe is broken.

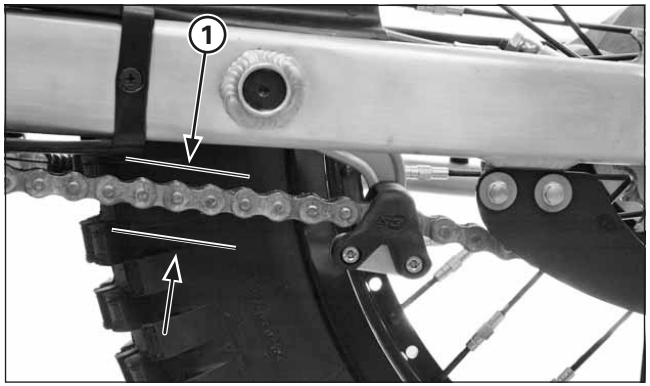

(1) DRIVE CHAIN SLACK

Drive Chain

Drive Chain Slack Inspection

During the break-in period, drive chain slack should be checked and adjusted often. Also check the drive chain slack after the drive chain replacement.
Regular cleaning, lubrication, and proper adjustment will help to extend the service life of the drive chain.

Shift the transmission into neutral, turn the engine off and support the motorcycle on its side stand.
Unhook the drive chain tensioner spring to remove any load on the chain.
Measure chain slack at the lower section midway between the sprockets.

Drive chain slack: 25 – 35 mm (1.0 – 1.4 in)

Rotate the wheel and chain slack in several sections. If slack in one section increases beyond the standard measurement, this indicates the chain has stretched and needs to be replaced.
Take care to prevent catching your fingers between the chain and sprocket.

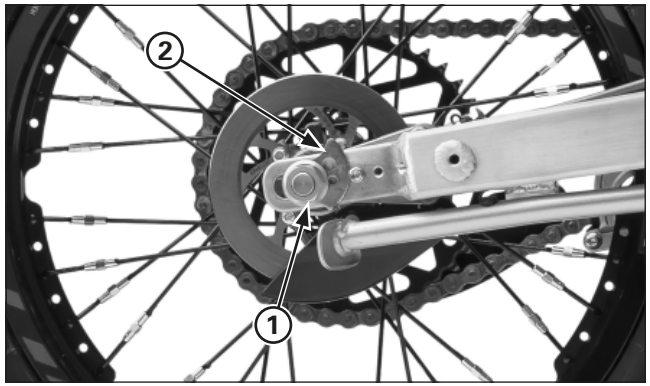

(1) AXLE NUT
(2) ADJUSTER

Drive Chain Slack Adjustment

Loosen the rear axle nut just enough to move the rear wheel in fore-aft direction.
Turn the adjuster equally on both sides until the correct drive chain tension is obtained.
Turn the adjuster counterclockwise will decrease slack and turning it clockwise will increase slack.

- Adjust the chain with the chain adjusters so that it is parallel with the center line of the frame.
- Check that the stopper is between the teeth of the adjuster.

Recheck the drive chain slack and free wheel rotation.
After adjustment, tighten the axle nut to the specified torque.

Torque: 69 N•m (7.0 kgf•m, 51 lbf•ft)

Lubricate the drive chain.
Hook the drive chain tensioner spring.

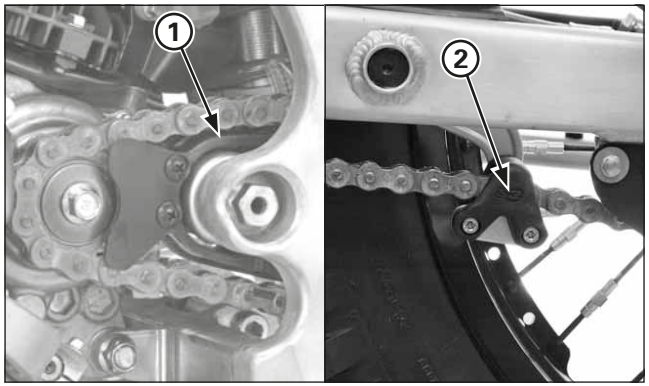

(1) DRIVE CHAIN SLIDER
(2) DRIVE CHAIN TENSIONER SLIDER

Drive Chain Slider

Inspection/Replacement

Check the drive chain slider for wear or damage.
If the wear is 2.0 mm (0.08 in) or more, replace the slider.
Check the drive chain tensioner slider for wear or damage.
If the wear is 2.0 mm (0.08 in) or more, replace the slider.

The drive chain slider and tensioner screws must be retightened after break-in.

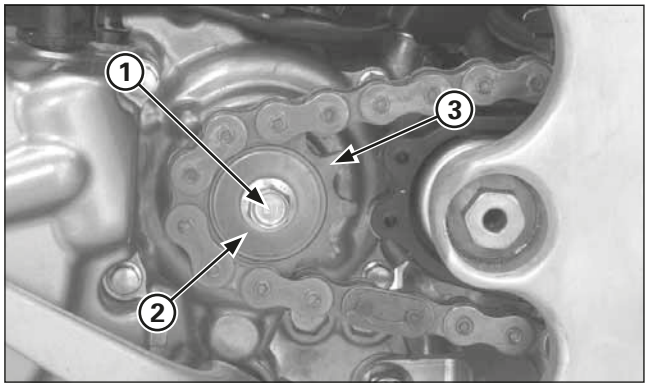

(1) BOLT
(2) SPRING WASHER
(3) DRIVE SPROCKET

Drive/Driven Sprockets

Drive Sprocket Replacement

Remove the drive sprocket cover.
Loosen the drive chain fully.

Insert 1st gear

Remove the screw drive pinion and spring washer.

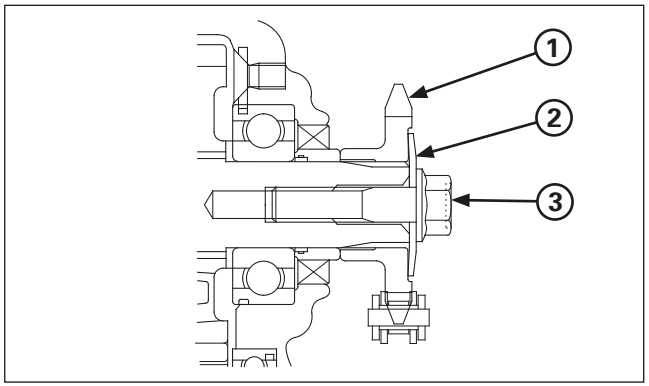

(1) DRIVE SPROCKET
(2) SPRING WASHER
(3) BOLT

Install the drive sprocket onto the countershaft as shown. Install the spring washer and bolt, then tighten the bolt to the specified torque.

Torque: 31 N•m (3.2 kgf•m, 23 lbf•ft)

Put the transmission in neutral.

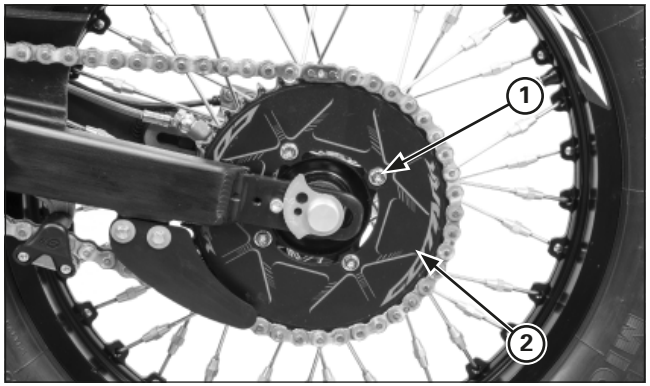

(1) BOLTS/NUT
(2) DRIVEN SPROCKET

Driven Sprocket Replacement

Remove the rear wheel (page 5-15).

Remove the bolts/nuts, washers and driven sprocket.

Installation is in the reverse order of removal.

Hold the bolts and tighten the nuts to the specified torque.

Torque: 24 - 30 N•m (2.4 - 3.0 kgf•m, 17.7 - 22.1 lbf•ft)

Adjust the drive chain slack (page 3-11).

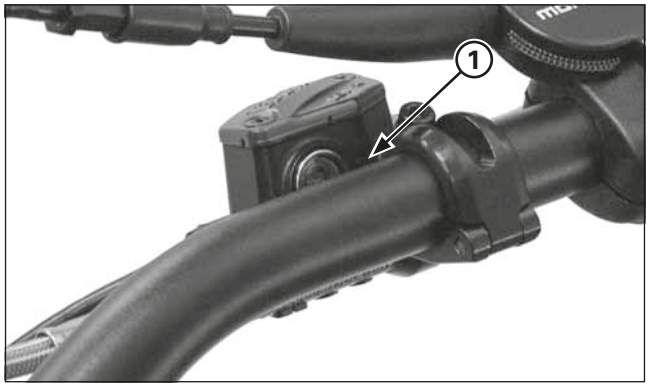

(1) "MIN" LEVEL

Brake Fluid

Front Brake Master Cylinder

Always inspect the brake fluid level.

Remove the screws, master cylinder cover and diaphragm.

If the fluid level is lower than the "MIN" line, check for the brake pad wear.
Replace the brake pad if necessary.
Refer to page 5-24 for brake pad replacement.

Also check the brake system for leaks.

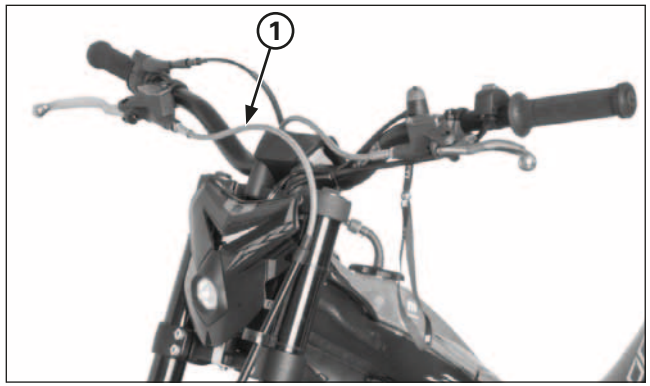

(1) BRAKE HOSE

Check that the brake hose does not bind or kink in any steering position and is not pulled when the suspension is extended.

Replace the brake fluid every 6 months.
Replace the brake hose every year.
Do not service the brake system in high humidity.

Brake fluid: DOT 4 only

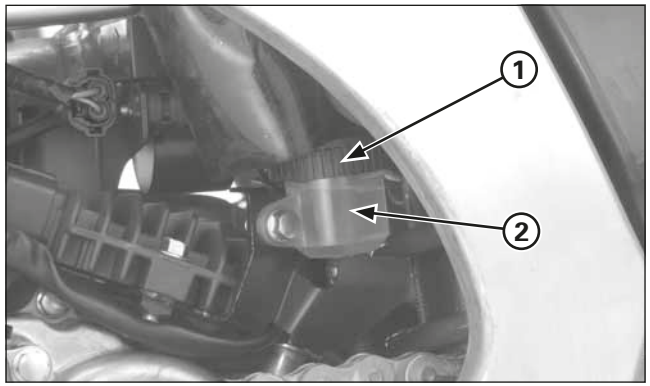

(1) COVER
(2) "MIN" LEVEL

Rear Master Cylinder

Always inspect the brake fluid level.

Remove the master cylinder reservoir cover, set plate and diaphragm.
If the fluid level is lower than the "MIN" level, check for brake pad wear.
Replace the brake pad if necessary.
Refer to page 5-24 for brake pad replacement.

Also check the brake system for leaks.

Replace the brake fluid every 6 months.
Replace the brake hose every year.
Do not service the brake system in high humidity.

Brake fluid: DOT 4 only

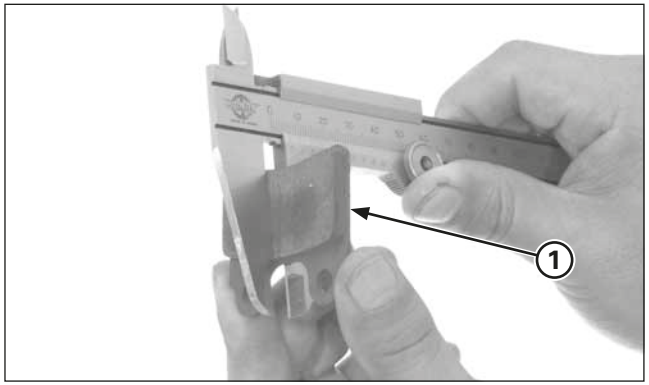

(1) BRAKE PAD

Brake Pad Wear

Measure the brake pad thickness.

Minimum thickness (subtracting the metal support):
1.0 mm (0.04 in)

If either pad is wear to the indicator, both pads must be replaced.

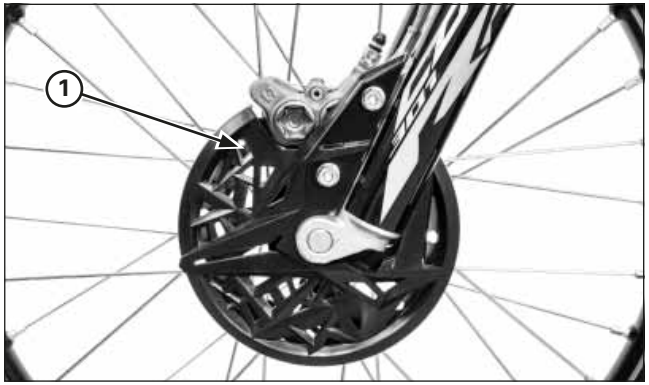

(1) BRAKE DISC

Brake System

Refer to page 1-6 for Brake Lever Adjustment.
Refer to page 1-7 for Brake Pedal Height Adjustment.

Brake Discs

Measure the rear brake disc runout with a dial gauge.

Service limit: 0.15 mm (0.006 in)

Replace the brake disc if the runout exceeds the service limit.

Measure the brake disc thickness.

Service limit: Front: 2.5 mm (0.08 in)
Rear: 2.5 mm (0.08 in)

Replace the brake disc if necessary.
Refer to pages 5-1 and 5-15 for removal.

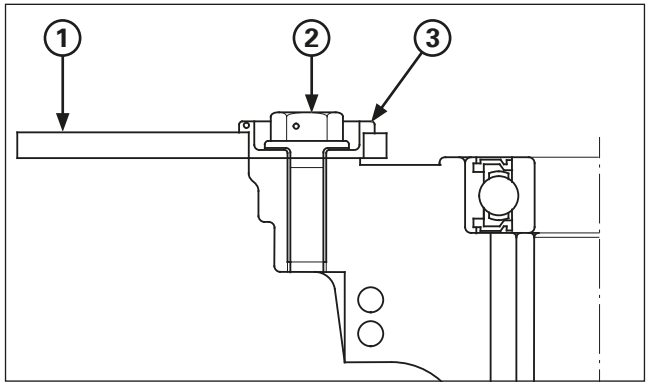

(1) BRAKE DISC
(2) DISC BOLT
(3) COLLAR

The front brake is floating type disc.
Replace the disc and disc bolts if the play in the rotating direction exceeds 2.0 mm (0.08 in), as measured at its periphery. The standard play is from 0.3 – 1.0 mm (0.01 – 0.04 in).
Apply a locking agent to the threads of the brake disc bolts before installation.

Torque:
Front: 18 - 20 N•m (1.8 - 2 kgf•m, 13-15 lbf•ft)
Rear: 16 - 18 N•m (1.6 - 1.8 kgf•m, 11-13 lbf•ft)

On the front brake, replace the collar with new ones if the disc starts to wobble right and left.

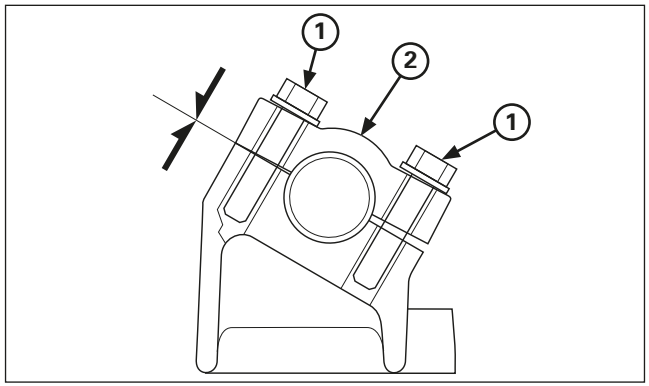

(1) HOLDER BOLTS
(2) UPPER HOLDER

Handlebar And Steering Head Bearings

Handlebar

Check the handlebar for bends or cracks.

Check that the handlebar has not moved from its proper position.
Check that the handlebar holder bolts are tight.
If necessary, tighten the holder bolts.
First tighten the forward bolts, then tighten the rear bolts to the specified torque.

Torque: 22 N•m (2.2 kgf•m, 16 lbf•ft)

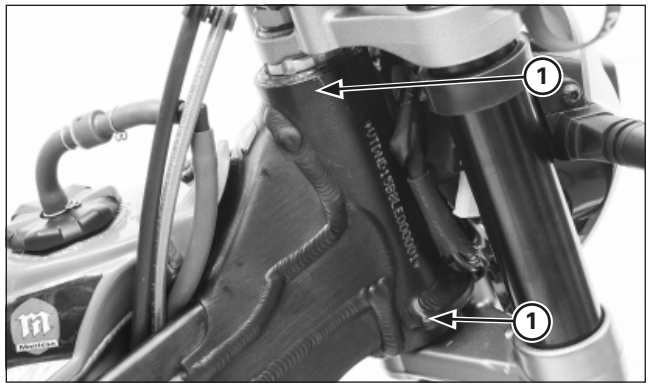

(1) STEERING HEAD BEARINGS

Steering Head Bearings

Support the motorcycle using the maintenance stand with its front wheel off the ground.

Turn the handlebar to the right and left to check for roughness in the steering head bearings. Stand in front of the motorcycle and grab the fork (at the axle), then push the fork in and out (toward the engine) to check for play in the steering head bearings. If any roughness or play is felt, adjust or replace the steering head bearings.

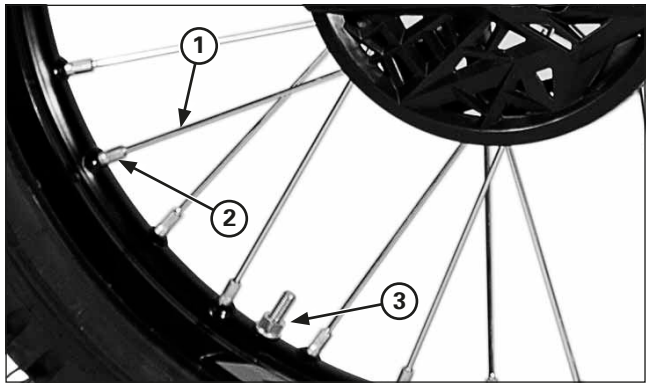

(1) SPOKE
(2) SPOKE NIPPLE
(3) RIM LOCK

Wheels And Tires

Proper air pressure will provided maximum stability and tire life.
Check tire pressure frequently and adjust if necessary.
Tire air pressure should be checked when the tires are COLD.

Standard tire air pressure FOR COMPETITION ONLY:
Front: 39 – 44 kPa (0.40 – 0.45 kgf/cm^2, 5.6 – 6.4 psi)
Rear: 29 – 34 kPa (0.30 – 0.35 kgf/cm^2, 4.3 – 5.0 psi)

Inspect the wheel for damage.
Check the wheel runout. If runout is noticeable, check the spokes are tight, or replace the wheel.

Check the axle for runout.
Check the condition of the front and rear wheel bearings.
Check the trueness of the wheel, spoke tension and the tightness of the rim lock nut.

Tool:
Spoke nipple wrench (front) 07701–0020300

Torque:
Spoke nipple:
Front: 2.45 - 4.9 N•m (0.24 - 0.49 kgf•m, 1.8-3.6 lbf•ft)
Rear: 2 - 3 N•m (0.2 - 0.3 kgf•m, 1.5-2.2 lbf•ft)
Rim lock nut: 13 N•m (1.3 kgf•m, 9 lbf•ft)

Front Suspension

Inspection

1. Make sure that the fork surfaces and dust seals are clean.
2. Check for signs of oil leakage. Damaged or leaking fork seals should be replaced before you ride the motorcycle.
3. Make a quick check of fork operation by locking the front brake and pushing down on the handlebar several times.

- When your Cota is new, break-in your Cota to ensure that the suspension has worked in.
- After break-in, test ride your Cota with the front suspension at the standard setting before attempting any adjustments.

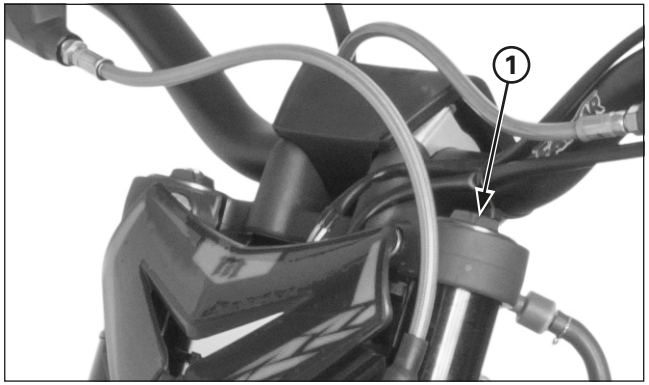

(1) PRE-LOAD ADJUSTER

Fork

The motorcycle is shipped with a light coating of grease on the forks. This is not an indication of a leak.

The fork should always be adjusted for the rider's weight and track conditions by using one or more of the following methods.

There are three adjustments you can make to the front suspension:

- Rebound damping (right fork)
  Turning the rebound damping adjuster adjusts how quickly the fork extends.
- Compression damping (right fork)
  Turning the compression damping adjuster adjusts how quickly the fork compressed.
- Spring pre-load (left fork)
  Turning the spring pre-load adjuster adjusts the spring initial pre-load length.
- Fork fluid volume
  The effects of higher or lower fork fluid level are only felt during final fork travel.

Standard position:
2.5 ± 0.5 turns out from full soft

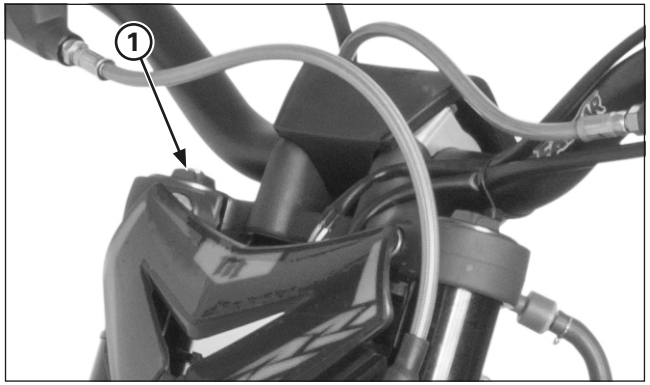

(1) REBOUND ADJUSTER

Replace the fork fluid every 6 months. See page 5-8, 5-10 for oil level adjustment after changing the fork fluid.

Use specified fork fluid which additives to assure maximum performance of your Cota's front suspension.

Specified fork fluid:
Showa SS05 (SAE 5W) or equivalent

Standard position:
15 ± 2 clicks from full hard

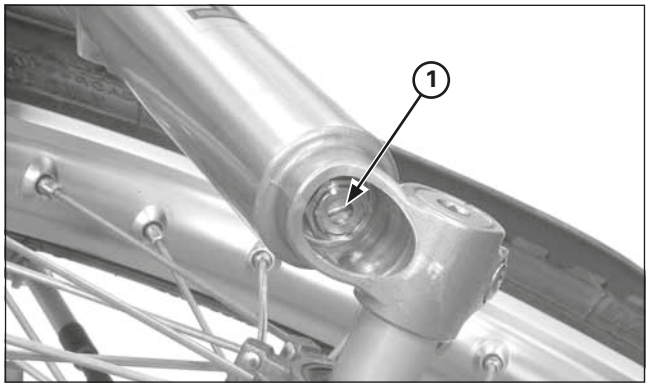

(1) COMPRESSION ADJUSTER

- Periodically check and clean all front suspension parts to assure top performance. Check the dust seals for dust, dirt and foreign materials. Check the fluid for any contamination.
- Make rebound damping adjustments in one-click increments. Adjusting two or more clicks at a time may cause you to pass over the best adjustment. Test ride after each adjustment.
- If you become confused about adjustment settings, return to the standard position and start over.

Standard position:
17 ± 2 clicks from full hard

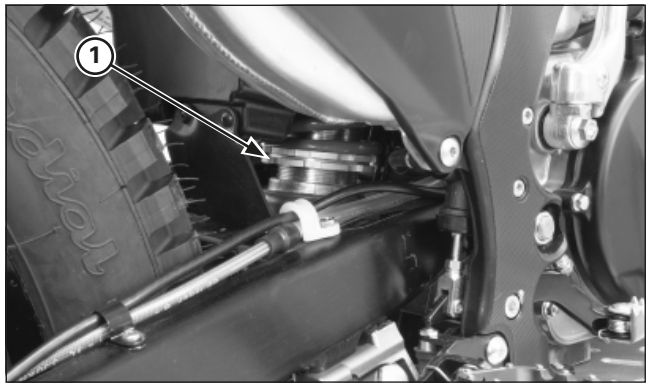

(1) PRE-LOAD ADJUSTER

Rear Suspension

The Pro-Link swingarm is controlled by a shock absorber. The rear shock absorber should always be adjusted for the rider's weight and track conditions by using one or more of the following methods.

- Spring pre-load
  Turning the spring pre-load adjuster adjusts the spring initial pre-load length.
- Rebound damping
  Turning the rebound damping screw adjusts how quickly the shock absorber extends.

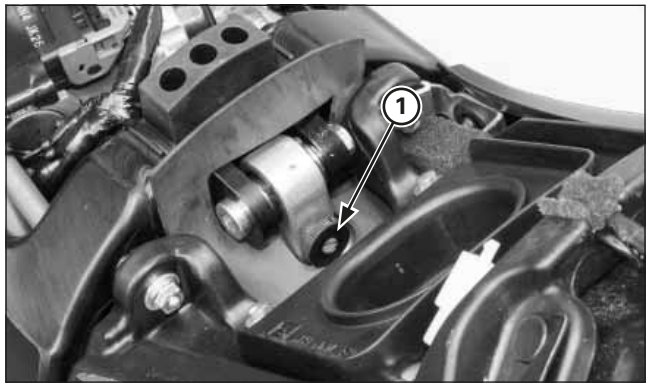

(1) REBOUND ADJUSTER

- When your Cota is new, your suspension will break-in as you ride.
- After break-in is completed, test ride your Cota with the rear suspension at the standard setting before attempting any adjustments.
- Make all rebound damping adjustment in one-click increments. Adjusting two or more clicks at a time may cause you to pass over the best adjustment. Test ride after each adjustment.
- If you become confused about adjustment settings, return to the standard position and start over.

Standard position:
10 ± 2 clicks from full hard

Inspection

1. Check for a broken or collapsed spring.
2. Bounce the rear of the machine up and down and check for smooth suspension action.
3. Check the rear shock absorber for a bent shaft or oil leaks.
4. Push the rear wheel sideways to check for worn or loose swingarm bearings. There should be no movement. If movement is felt, replace the pivot bearings (page 5-17).

Cleaning

Clean your COTA regularly to protect the surface finishes and inspect for damage, wear, or oil leaks.
When washing your COTA, always use water and a mild detergent (such as dishwashing liquid) to avoid discoloring the decals.

NOTICE

High pressure water (or air) can damage certain parts of the motorcycle.

Wheel hubs.
Light and engine stop switch.
Muffler outlet.
Electrical components.
Drive Chain.
Brake and clutch master cylinder.
Rubber components.
Plastic components.
Stickers, decals.
Air duct.

1. After cleaning, rinse your COTA thoroughly with plenty of clean water. Detergent residue can corrode alloy parts.
2. Dry your COTA, start the engine, and let it run for several minutes.
3. Lubricate the drive chain immediately after washing and drying your COTA.
4. Test the brakes before riding your COTA. Several applications may be necessary to restore normal braking performance. Braking performance may be impaired immediately after washing your COTA.

Storage

Extended storage, such as for winter, requires that you take certain steps to reduce the effects of non-use. In addition, it is useful to do the necessary repairs BEFORE storing your COTA, as if you don't you could forget these repairs when you use it again.

Preparing The Motorcycle For Storage

1. Completely clean all parts of your COTA. Wash with fresh water and wipe dry.
2. Drain the fuel tank into an approved gasoline container.

⚠ WARNING

Gasoline is highly flammable and is explosive. You can be burned or seriously injured when draining or refueling.

- **Stop engine and keep heat, sparks, and flame away.**
- **Drain or refuel only outdoors.**
- **Wipe up spills immediately.**

3. Remove the coolant drain bolt at the water pump cover to drain coolant. Drain coolant into a proper container. After the coolant has been completely drained, ensure that the drain bolt sealing washer is in good condition and reinstall the drain bolt.
4. Lubricate the drive chain.
5. Remove the spark plug and pour a table spoon (15 – 20 cm^3) of clean engine oil into the cylinder.
   With the spark plug grounded or the Engine Stop Switch pushed, crank the engine several times to distribute the oil.
6. Inflate the tires to their recommended pressure.
7. Place your COTA on the maintenance stand or equivalent to raise both tires off the ground.
8. Stuff a rag into the muffler outlet. Then tie a plastic bag over the end of the muffler to prevent moisture from entering.
9. Cover your COTA and store in a place which is free of humidity and dust.

Removal from Storage

1. Uncover and clean your COTA.
   Change the engine and transmission oil if more than 4 months have passed since the start of storage.
2. Uncover the end of the muffler and remove the rag from the muffler outlet.
3. Fill the fuel tank with recommended fuel.
4. Pour the recommended coolant slowly from the radiator filler neck.
   Bleed the air in the cooling system and install the radiator cap securely (page 1-2).

Memo

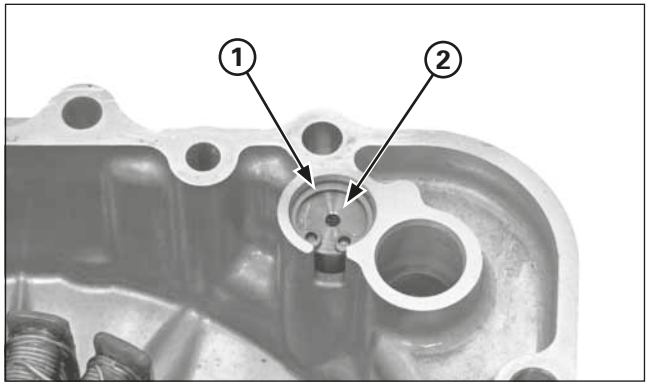

(1) SNAP RING
(2) PRESSURE RELIEF VALVE

Oil Pressure Relief Valve

Removal/Inspection

Drain the engine oil.
Remove the left crankcase cover (page 4-49).

Remove the snap ring.
Remove the pressure relief valve from the left crankcase cover.

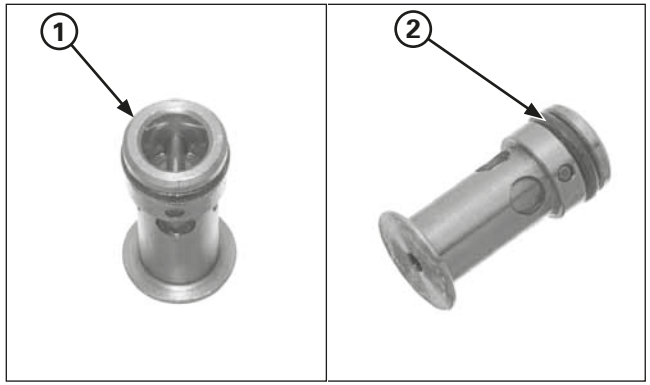

(1) RELIEF VALVE
(2) O-RING

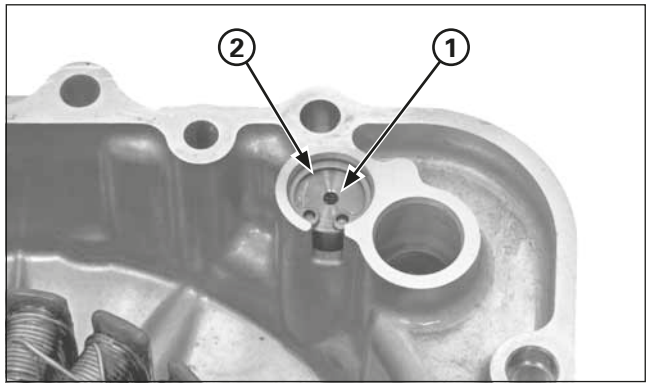

(1) PRESSURE RELIEF VALVE
(2) SNAP RING

Check the relief valve operation by pushing the relief valve piston.

Installation

Apply oil to a new O-ring and install it onto the relief valve groove.
Install the relief valve into the left crankcase cover.
Install the snap ring into the crankcase cover groove securely.
Install the left crankcase cover (page 4-51).

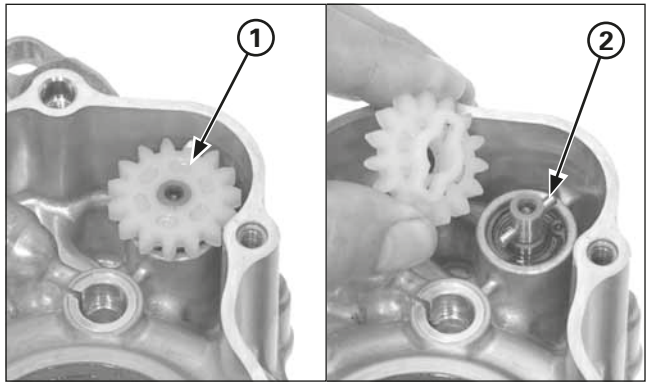

(1) DRIVEN GEAR
(2) DRIVE PIN

Oil Pump

Disassembly

Remove the engine from the frame.
Separate the crankcase halves (page 4-54).

Remove the oil pump driven gear and drive pin.

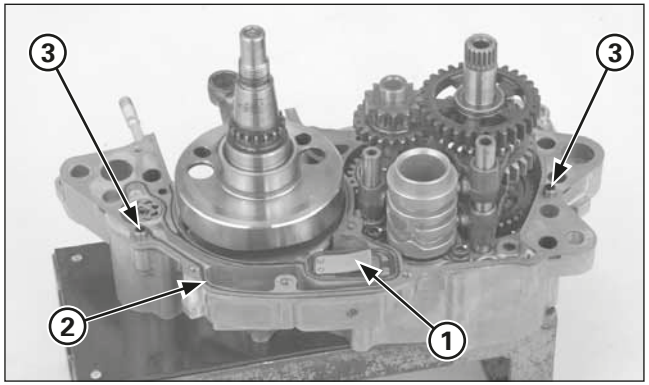

(1) ONE-WAY REED VALVE
(2) GASKET
(3) DOWEL PINS

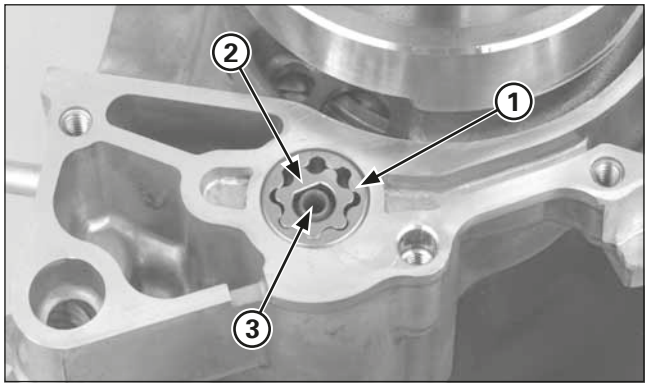

(1) OUTER ROTOR
(2) INNER ROTOR
(3) OIL PUMP SHAFT

Remove the one-way reed valve, gasket and dowel pins.

Remove the oil pump shaft, outer and inner rotors.

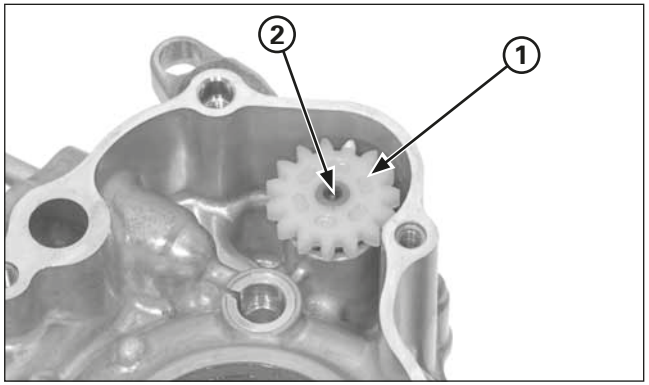

(1) DRIVEN GEAR
(2) OIL PUMP SHAFT

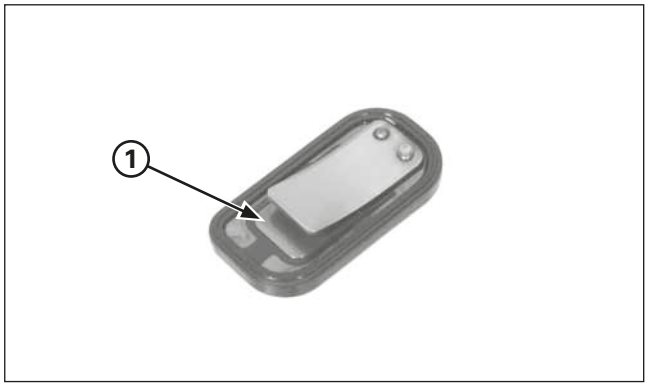

(1) ONE-WAY REED VALVE

Inspection

Check the oil pump driven gear for wear or damage.
Check the oil pump shaft for wear or damage.

Check the one-way reed valve for damage, replace if necessary.

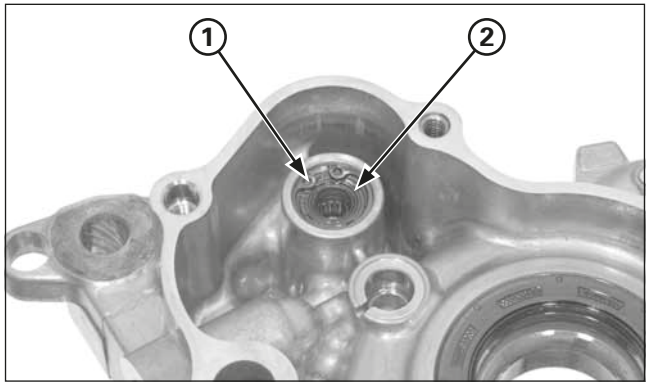

(1) SNAP RING
(2) OIL SEAL

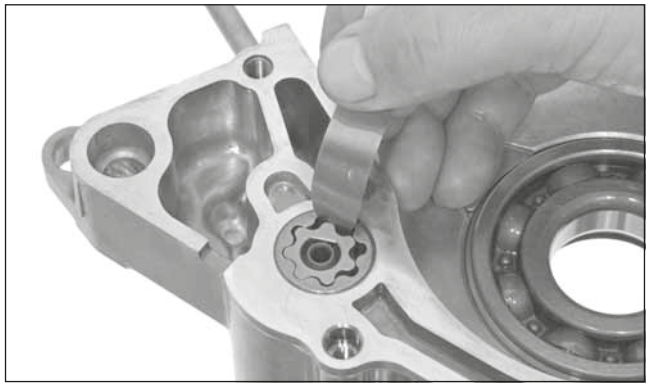

Check the oil pump shaft oil seal in the left crankcase for damage or deterioration, replace if necessary.

Temporarily install the oil pump shaft, inner and outer oil pump rotors into the right crankcase.

Measure the oil pump tip clearance.

Service limit: 0.20 mm (0.008 in)

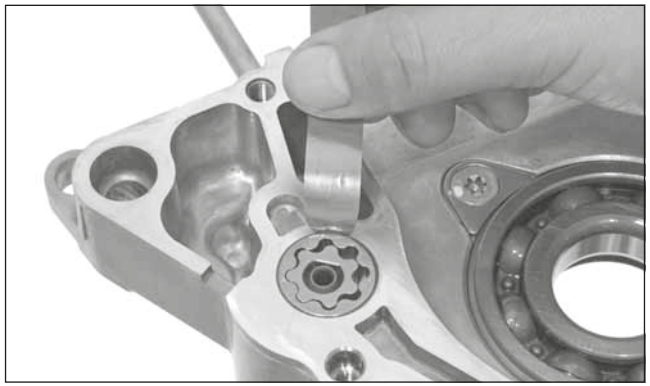

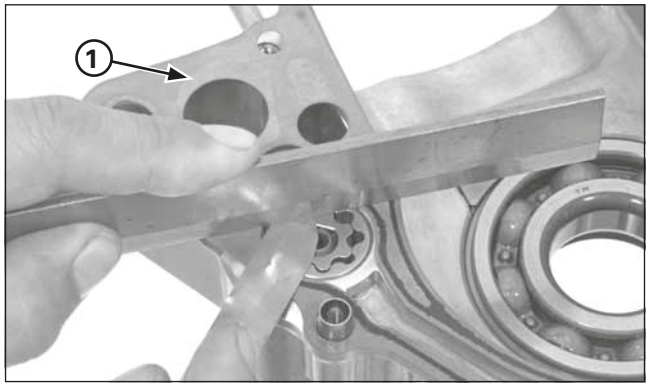

(1) GASKET

Measure the oil pump body clearance.

Standard: 0.15 – 0.20 mm (0.006 – 0.008 in)

Temporarily install the crankcase gasket.
Measure the side clearance using a straight edge and feeler gauge.

Standard: 0.05 – 0.12 mm (0.002 – 0.004 in)

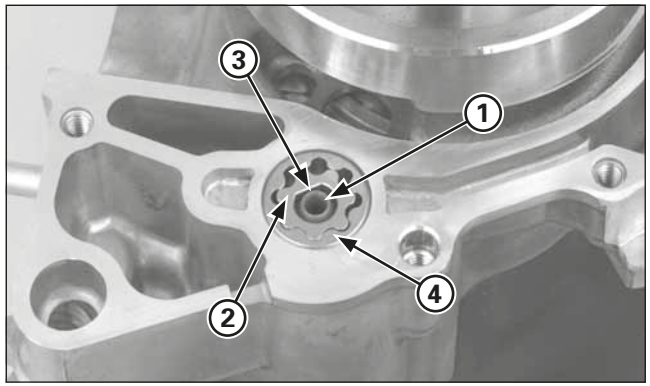

(1) OIL PUMP SHAFT
(2) INNER ROTOR (3) FLAT SURFACES
(4) OUTER ROTOR

Assembly

Apply clean engine oil to the oil pump rotors and shaft.

Install the oil pump shaft into the right crankcase.
Install the inner rotor aligning the flat surface between the rotor and pump shaft.
Install the outer rotor.

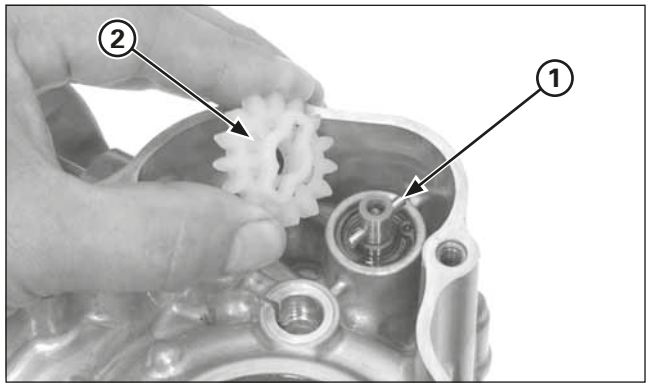

(1) DRIVE PIN
(2) DRIVEN SPROCKET

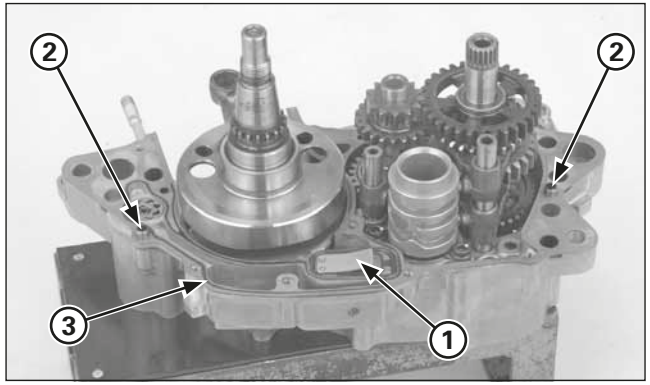

(1) ONE-WAY REED VALVE
(2) DOWEL PINS
(3) NEW GASKET

Install the drive pin into the oil pump shaft hole.
Install the oil pump driven sprocket aligning its groove with the drive pin.

Install the one-way reed valve into the right crankcase.
Note the direction of the reed valve.
Install the dowel pins and new gasket.
Assemble the crankcase.

Install the removed parts in the reverse order of removal.

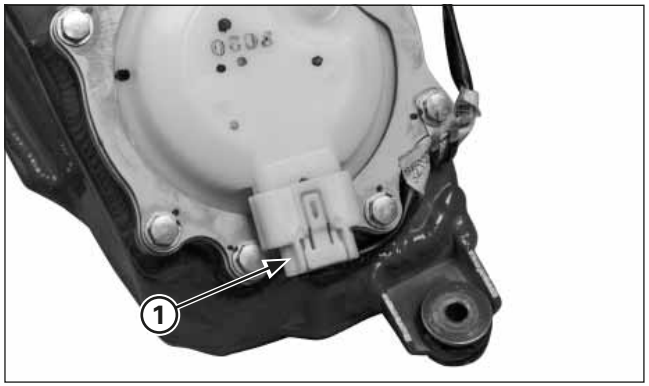

(1) 5P CONNECTOR

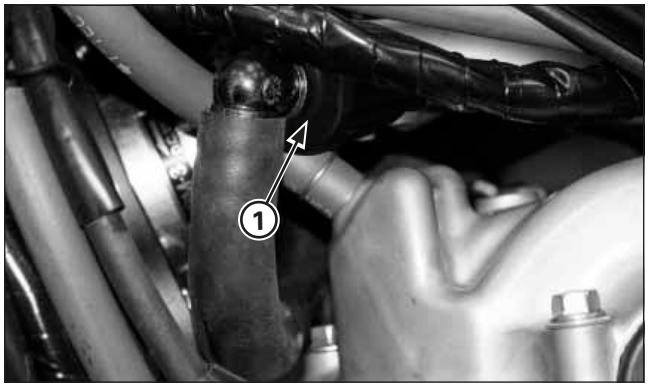

(1) QUICK CONNECTOR PROTECTOR

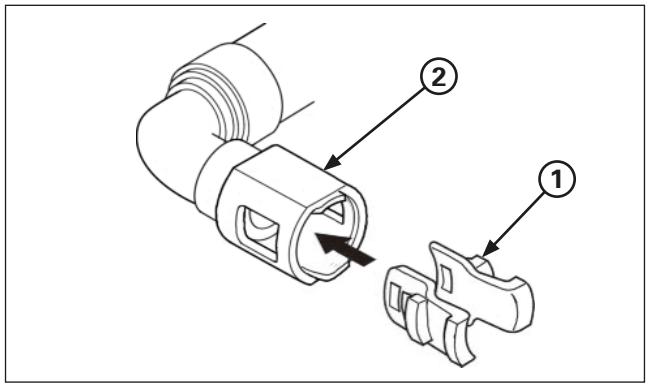

(1) PAWL
(2) QUICK CONNECTOR

Fuel Feed Hose

Disassembly / Installation

The pawl of the connector must be changed every time the fuel feed hose is disconnected.

Disassembly of fuel pump side

Turn off the engine.
Remove the rear fender
Pull up the fuel tank
Disconnect the fuel pump's 5P connector.
Turn on the engine until it stops.

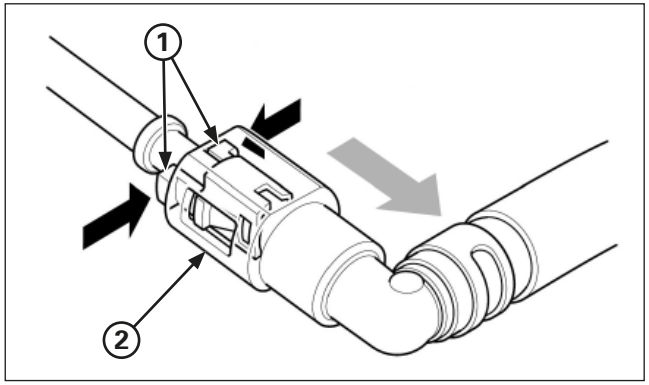

(1) TABS
(2) QUICK CONNECTOR

1. Remove the protective covering from the quick connector.
2. Check whether the connector is dirty and clean if necessary. Cover the quick connector with a cloth.
3. Hold the quick connector with one hand and squeeze the tabs with the other to release the connector. Pull the connector apart.

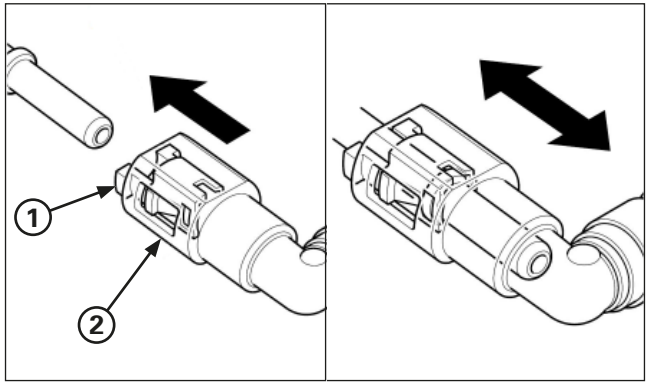

(1) PAWL
(2) QUICK CONNECTOR

1. Insert a new pawl into the quick connector. Insert the quick connector into the fule pump feed hose until it clicks. If it is hart to insert, apply a small amount of engine oil to the fuel pump feed hose.
2. Pull on the quick connector to check that it does not come out and is firmly connected.

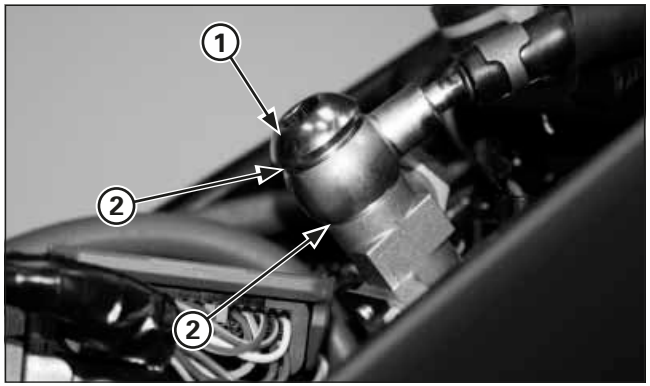

(1) BANJO BOLT
(2) SEALING WASHER

Fuel Line Inspection

Fuel Pressure Inspection

⚠ WARNING

Gasoline is highly flammable and is explosive.
You can be burned or seriously injured.

- **Stop engine and keep heat, sparks, and flame away.**
- **Refuel only outdoors.**
- **Wipe up spills immediately.**

NOTICE

- *Before disconnecting the fuel hoses, release the fuel pressure by loosening the fuel feed hose banjo bolt at the injector holder.*
- *Always replace the sealing washers when the fuel hose banjo bolt is removed or loosened.*

Remove the rear fender.

Cover the fuel feed hose banjo bolt with a rag or shop towel.
Slowly loosen the banjo bolt and catch the remaining fuel using an approved gasoline container.

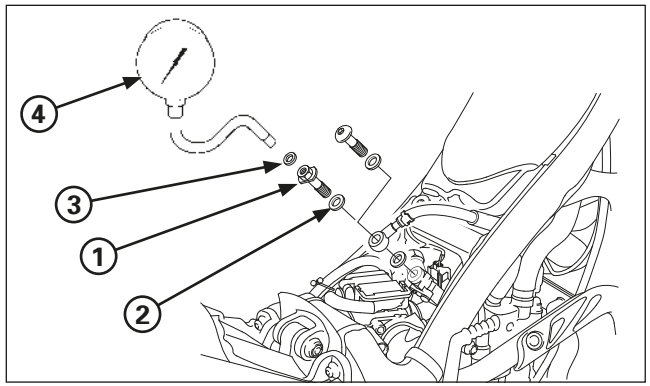

(1) BANJO BOLT, 12 MM
(2) SEALING WASHER, 12 MM
(3) SEALING WASHER
(4) FUEL PRESSUE GAUGE

Remove the fuel feed hose banjo bolt and attach the fuel pressure gauge with the following parts.

Sealing washer, 12 mm	**90428-PD6-003**
Sealing washer, 12 mm	**90430-PD6-003**

Tool:

Fuel pressure gauge, 0-100 psi	**07406-004000C**
Fuel pressure adapter	**07406-004030A**
Banjo bolt, 12 mm	**90008-PP4-E02**

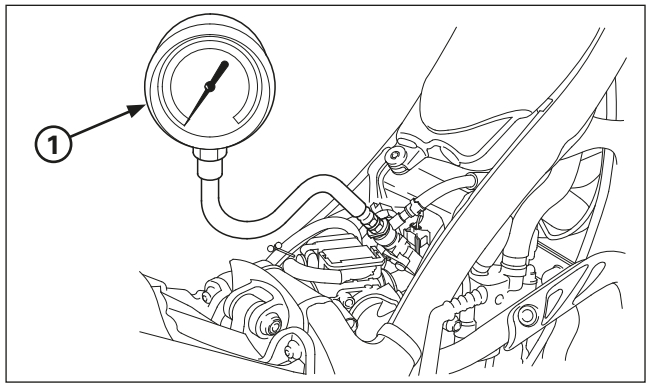

(1) FUEL PRESSURE GAUGE

Start the engine.
Read the fule pressure at idle.

Idle Speed: 1,800 ± 100 rpm
Standard: 230 kPa - 320 kPa
(2.34 kgf/cm² - 3.26 kgf/cm²)
(33 psi - 46 psi)

If the fuel pressure is lower than specified, inspect the following:
– Fuel line leaking
– Clogged fuel filter
– Fuel pump (page 4-7)

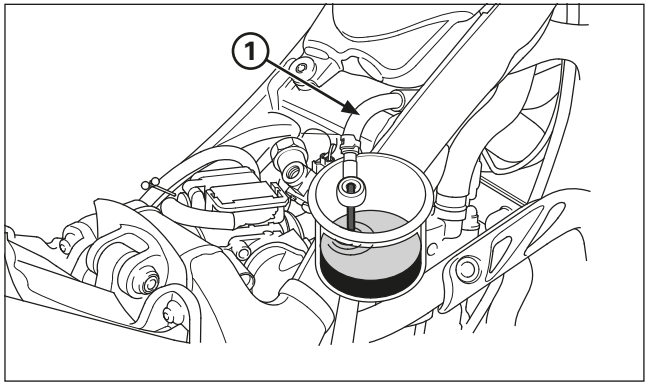

(1) FUEL RETURN HOSE

Fuel Pump Flow Inspection

Remove the rear fender.

Disconnect the banjo bolt and insert the end of the hose into an approved gasoline container.
Connect another fuel hose to the pressure regulator and install the hose end in an approved gasoline container.

Connect a 12 V battery to the fuel pump 2P (Black) connector terminals, check amount of fuel flow for 10 seconds.

Amount of flow:
125cm^2 (4.32 US oz) minimum / 10 seconds at 12 V

If the fuel flow is less than specified, inspect the following:
– Pinched or clogged fuel hose
– Clogged fuel filter
– Pressure regulator
– Fuel pump (page 4-7)

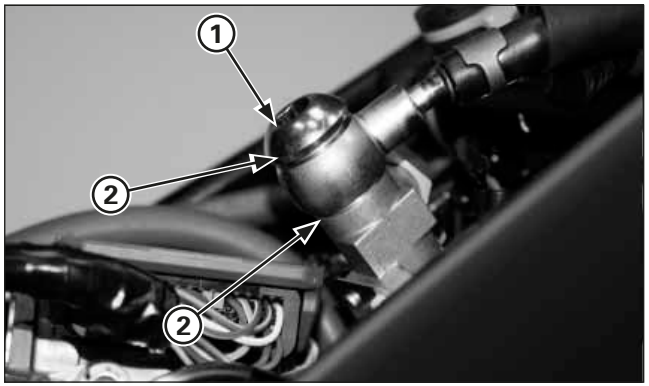

(1) BANJO BOLT
(2) SEALING WASHER

After inspection, install the banjo bolt into the fuel feed hose using new sealing washers.

Tighten the banjo bolt the the specified torque.

Torque: 22 N•m (2.2 kgf•m, 16.2 lbf•ft)

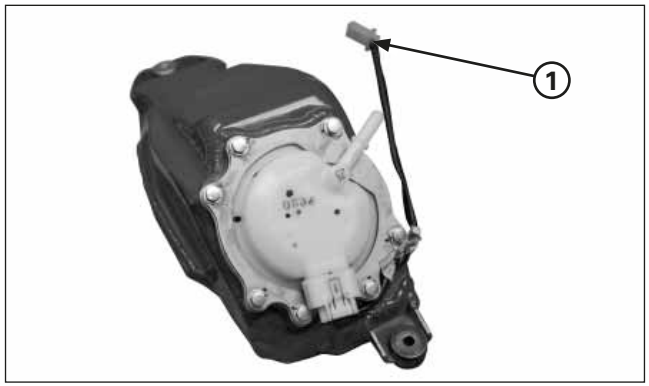

(1) 2P CONNECTOR

Connect the fuel pump 2P connector.

Start the engine and check for fuel leaks.

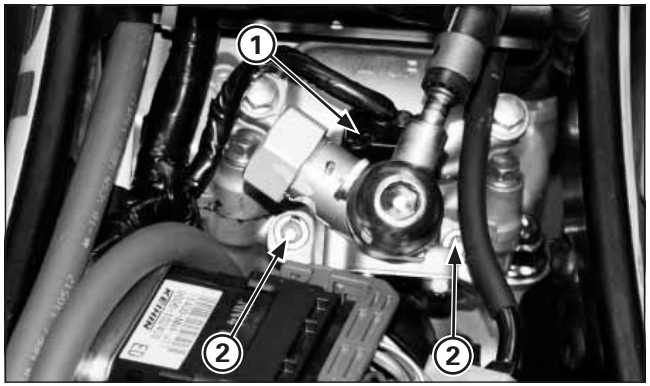

(1) 2P CONNECTOR
(2) SOCKET BOLTS

Fuel Tank/Fuel Pump

Removal

Remove the rear fender.

Disconnect the fuel injector 2P connector.
Remove the fuel injector socket bolts.

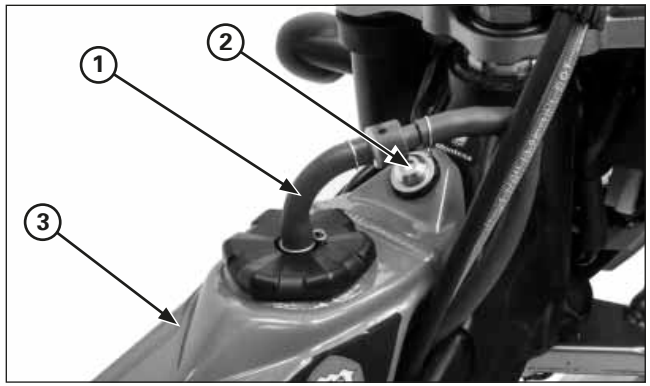

(1) BREATHER HOSE
(2) BOLT
(3) FUEL TANK

Disconnect the fuel tank breather hose.
Remove the fuel tank mounting bolt.

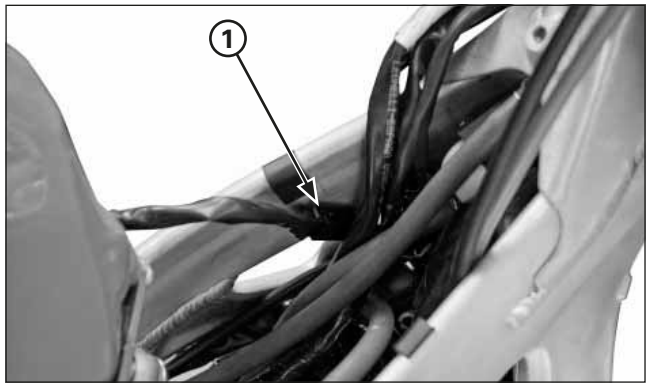

(1) 2P CONNECTOR

Pull up the fuel tank and disconnect the fuel pump 2P connector.

Remove the fuel tank and injector as an assembly being careful not to damage the injector, escpecially the tip of the injector

After removing the fuel tank and injector, protect the tip of the injector from damage.

Cover the cylinder head injector hole to prevent dirt from falling into the combustion chamber.

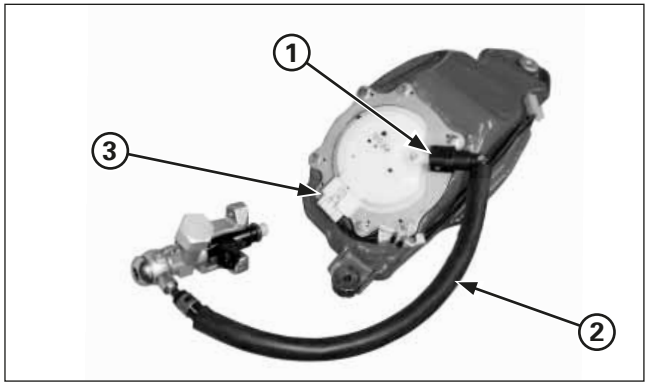

(1) QUICK CONNECTOR
(2) FUEL FEED HOSE
(3) 5P CONNECTOR

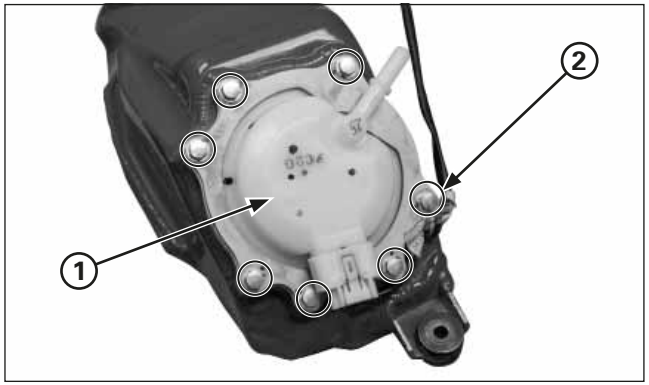

(1) FUEL PUMP
(2) BOLTS

Remove the 5P connector and fuel feed hose.

Remove the fuel pump base mounting bolts.
Remove the fule pump assembly being careful not to damage the pump.

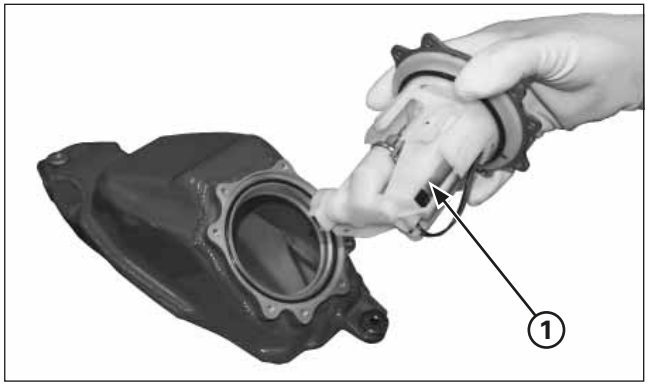

(1) FUEL PUMP

Installation

NOTICE

Always replace the packing with a new one when the fuel pump is removed.

Clean any oil off from the mating surface of the fuel pump base and fuel tank.
Install a new packing onto the fuel pump base.
Install the fuel pump assembly into the fuel tank (as pictures shows).
Be careful not to damage the fuel pump wire.
Make sure the packing is seated against the fuel tank.
Also check that the packing is not placed on the fuel tank boss.

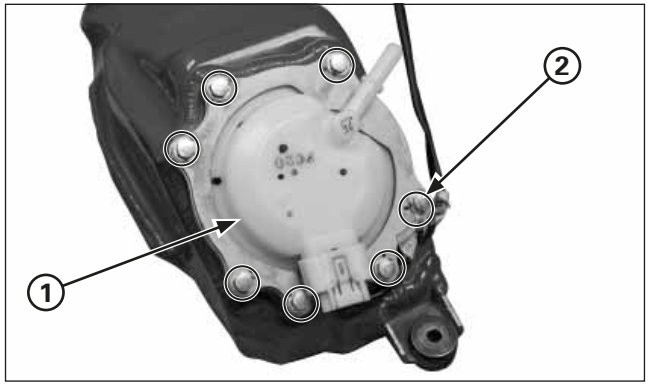

(1) FUEL PUMP
(2) BOLTS

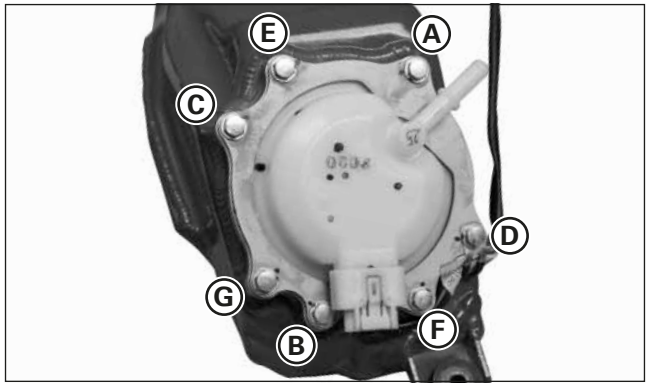

Install the fuel pump mounting bolts.

Tighten the fuel tank mounting bolts in the alphabetical order shown.

Torque: 7 - 9 N•m (0.7 - 0.9 kgf•m, 5.1 - 6.6 lbf•ft)

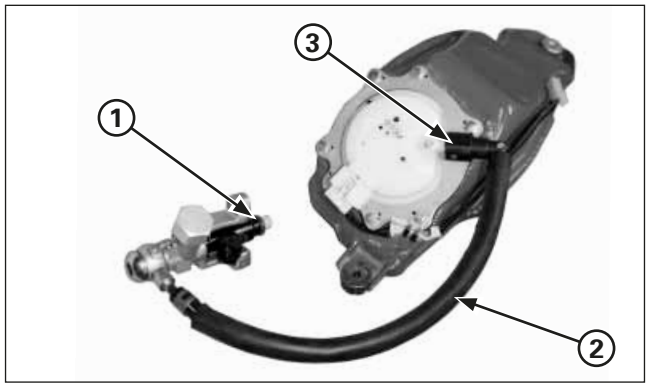

(1) NEW O-RING
(2) FUEL FEED HOSE
(3) QUICK CONNECTOR

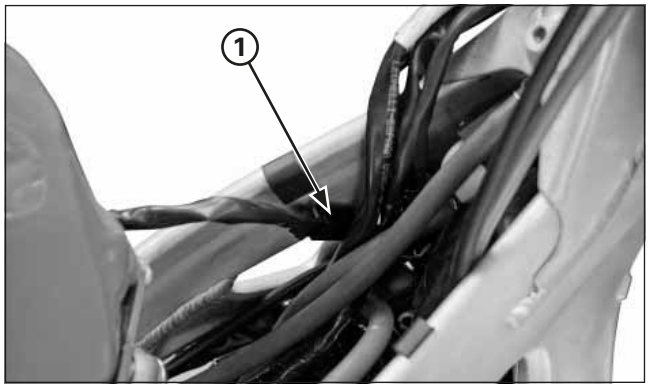

(1) 2P CONNECTOR

Always replace the injector O-ring with a new one whenever the injector is removed from the cylinder head.

Install a new O-ring into the injector groove.

Install the fuel feed hose.

Install the fuel tank onto the frame and connect the fuel pump 2P connector.

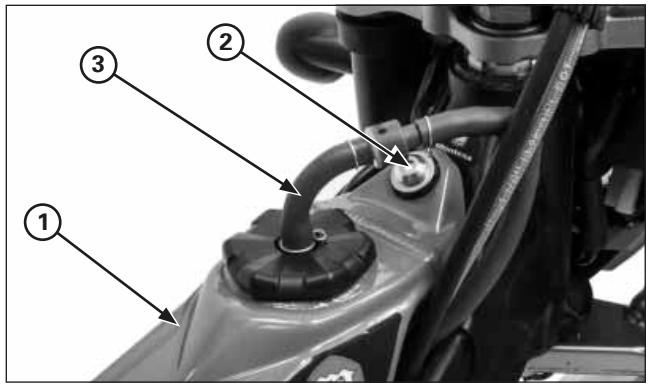

(1) FUEL TANK
(2) BOLT
(3) BREATHER HOSE

Install the fuel tank into the frame being careful not to pinch the throttle cable.

Install and tighten the fuel tank mounting bolts.
Connect the fuel tank breather hose to the hose clip.

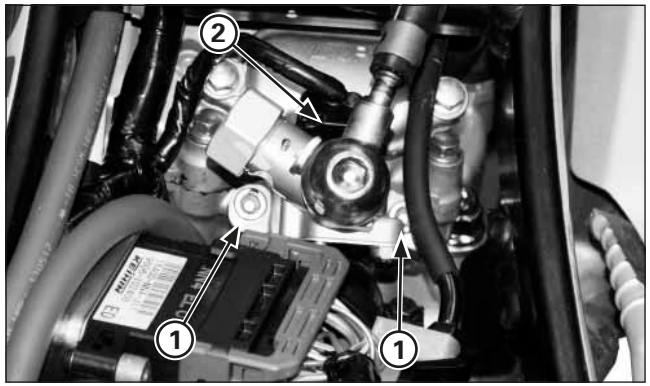

(1) SOCKET BOLTS
(2) 2P (BLACK) CONNECTOR

Install and tighten the injector holder socket bolts to the specified torque.

Torque: 8 - 12 N•m (0.8 - 1.2 kgf•m, 5.9 - 8.8 lbf•ft)

Connect the fuel injector 2P (Black) connector.

Install the rear fender.

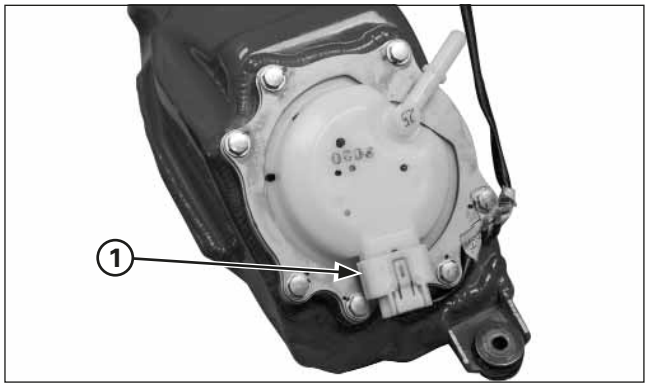

(1) 5P CONNECTOR

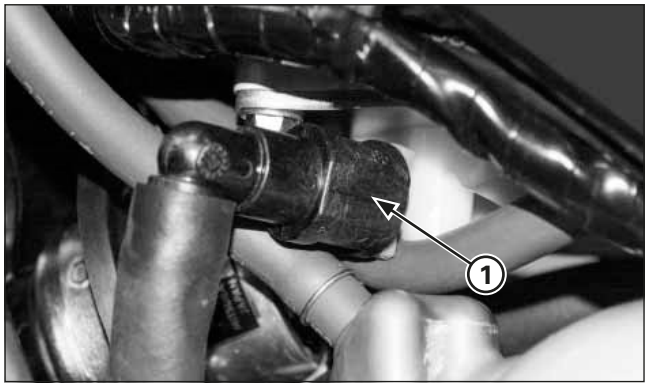

(1) QUICK CONNECTOR

Disassembly

Disconnect the 5P connector from the fuel pump

Disconnect the fuel feed hose (page 4-4)

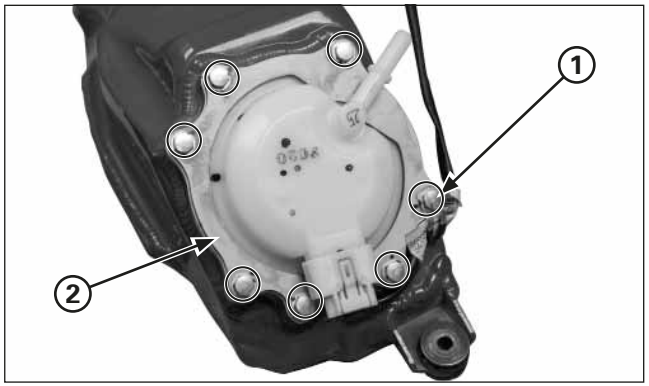

(1) BOLTS
(2) FUEL PUMP BASE

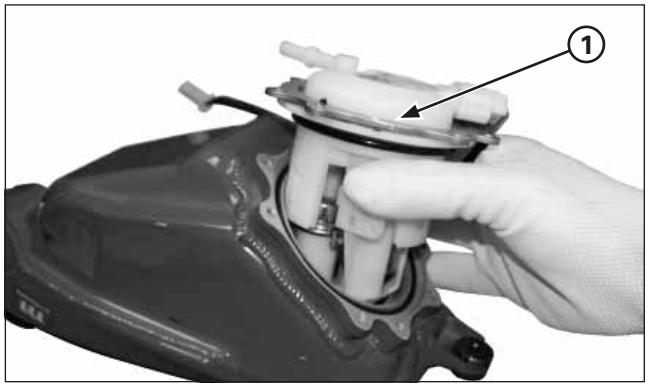

(1) FUEL PUMP ASSEMBLY

Remove the fule tank.

Remove the bolts from the fuel pump base and remove the fuel pump assembly, taking care not to damge the pump or pump wires.

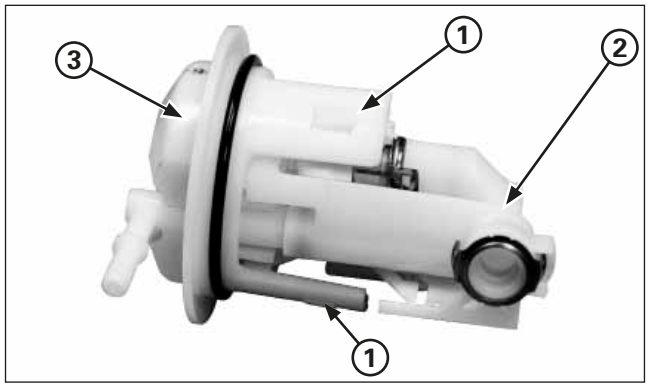

(1) PAWL
(2) PUMP BODY
(3) PUMP

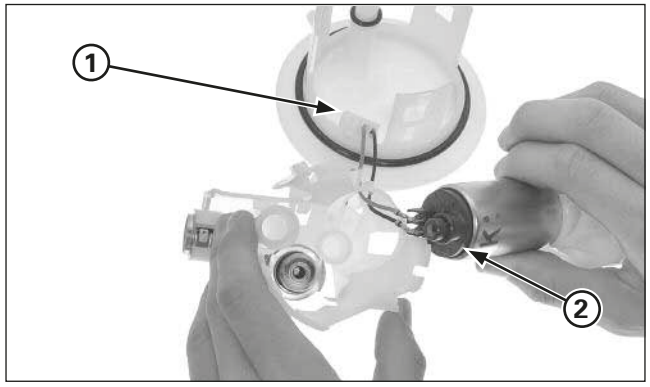

(1) CABLE TERMINALS
(2) MOTOR/FILTER

Cleaning the fuel filter

Press the three pawls between the pump body and the pump. Remove the body from the pump.

Disconnect the cable terminals (take note initial position).

Disassemble the motor/filter system from the pump body.

(1) FILTER SURFACE

Clean the surface of the filter.

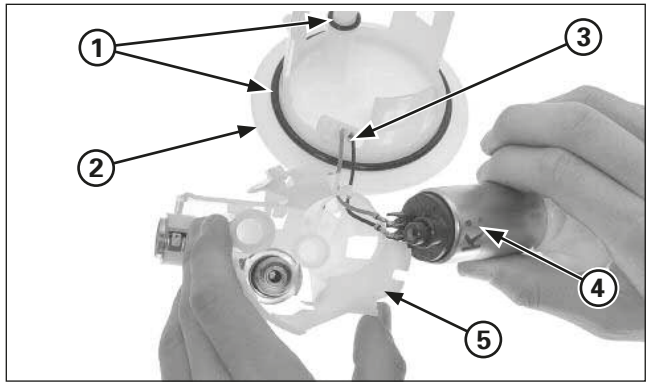

(1) O-RINGS
(2) PUMP
(3) MOTOR WIRES
(4) MOTOR/FILTER
(5) PUMP BODY

Replace the o-rings with new ones every time the fuel pump is disassembled.

Clean the contact surface bewtween the pump and the fuel tank. Install new o-rings. Apply a small amount of engine oil for installation.

Install the motor wires through the slot in the pump body and connect them to the terminals.

Install the pump motor in the pump body being careful not to damage the wires.

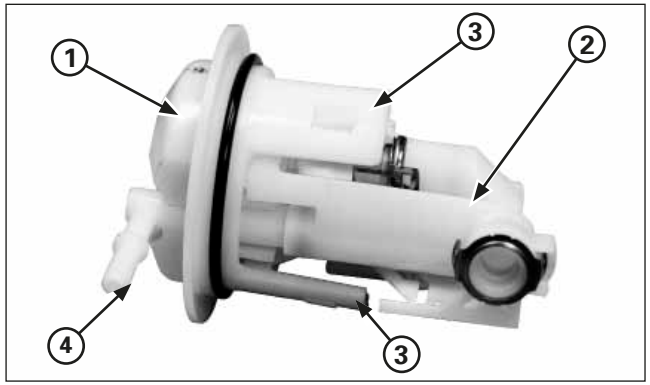

(1) PUMP
(2) BODY
(3) PAWLS
(4) CONNECTING PIPE

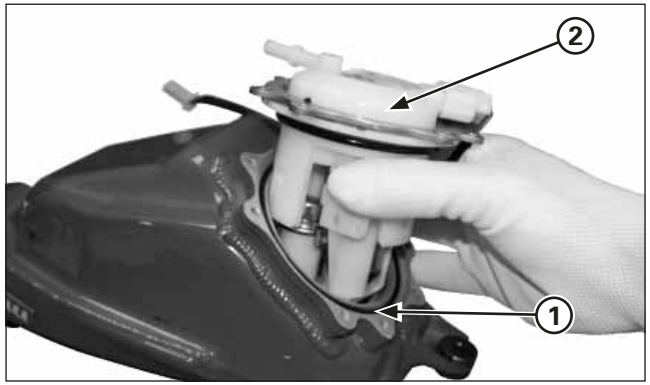

(1) O-RING
(2) PUMP ASSEMBLY

Assembly

Insert the pump body in the pump. Make sure that the pawls are engaged and the pump body and pump are aligned.

Install a new o-ring in the groove of the tank. Install the pump assembly in the tank being careful not to damage the o-rings. Apply a small amount of engine oil for installation.

Make sure that the bearing is properly positioned and supported in the fuel tank.

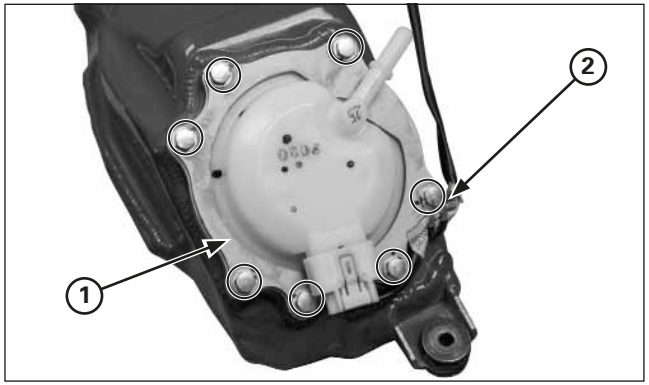

(1) BOLTS
(2) FUEL PUMP BASE

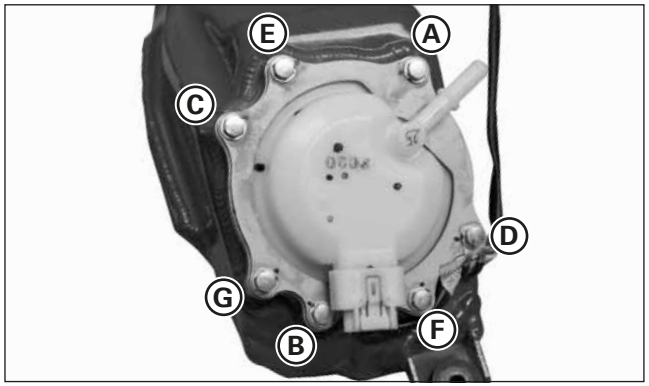

Insert the mounting bolts in the pump.

Place the pump base in the position as shown.

Tighten the pump mounting bolts in alphabetical order as show.

Torque: 7 - 9 N•m (0.7 - 0.9 kgf•m, 5.1 - 6.6 lbf•ft)

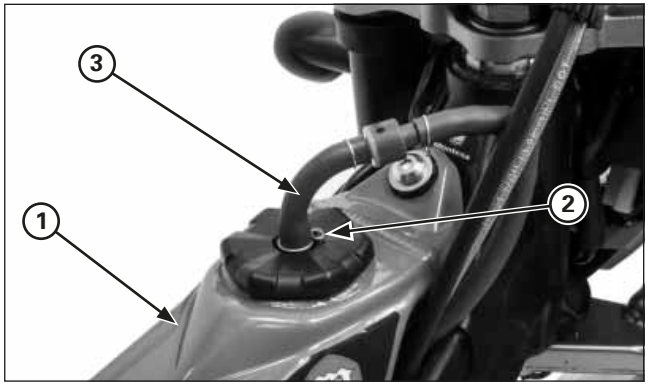

(1) FUEL TANK
(2) CLIP
(3) BREATHER HOSE

Mount the fuel tank on the chassis.

Connect the breather hose to the fuel tank and secure it with the clip.

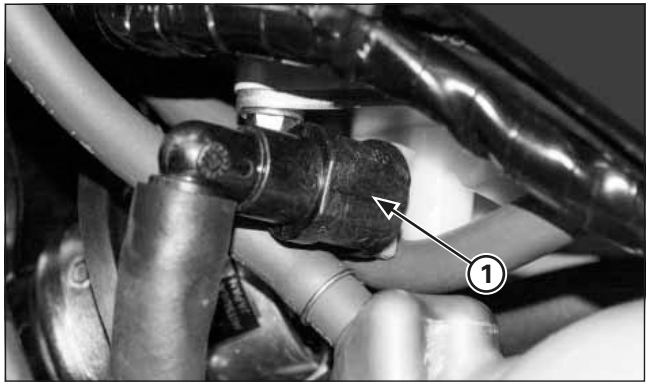

(1) QUICK CONNECTOR

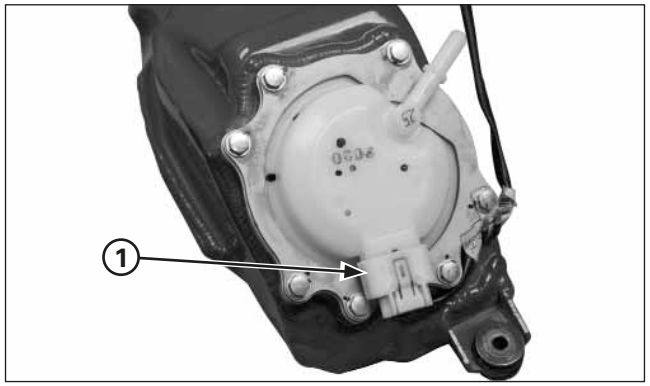

(1) 5P CONNECTOR

Insert the quick connector on the pump (page 4-4).

Connect the fuel pump 5P connector.

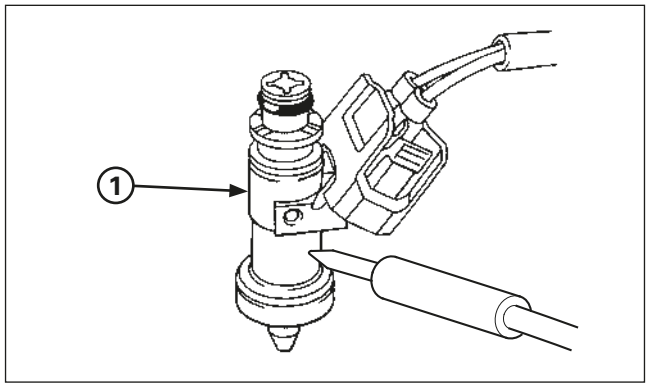

(1) FUEL INJECTOR

Injector

Inspection

Remove the rear fender.

Start the engine and let it idle.
Confirm the fuel injector operates with a sounding rod or stethoscope.

If the fuel injector does not operate, replace the injector.

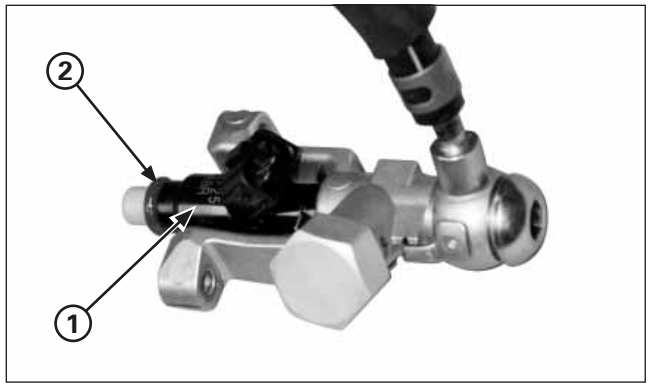

(1) FUEL INJECTOR
(2) O-RING

Removal/Installation

Do not remove the fuel injector from the injector holder. Replace the fuel injetor and holder as an assembly.

Alway replace the O-ring when the fuel injector assembly is removed from the cylinder head.

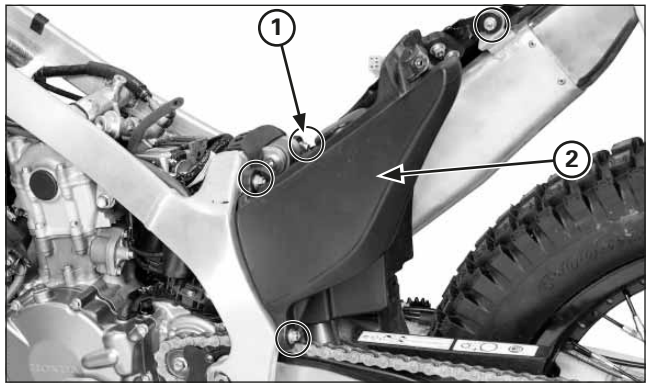

(1) BOLTS/NUTS
(2) AIR CLEANER HOUSING

Throttle Body

Removal

Remove the rear fender.

Loosen the connecting tube band screw.
Remove the silencer mounting bolt.
Remove the air cleaner housing mounting bolts/nuts.

Pull the air cleaner housing rearward being careful not to damage the wire harness.
Disconnect the crancase breather hose from the housing joint.

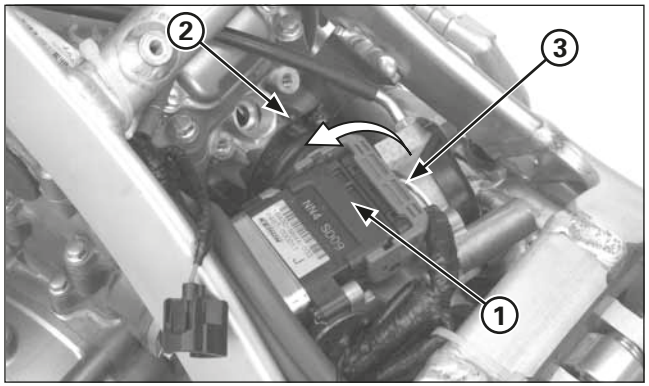

(1) 32P (BLACK) CONNECTOR
(2) BAND SCREW
(3) THROTTLE BODY

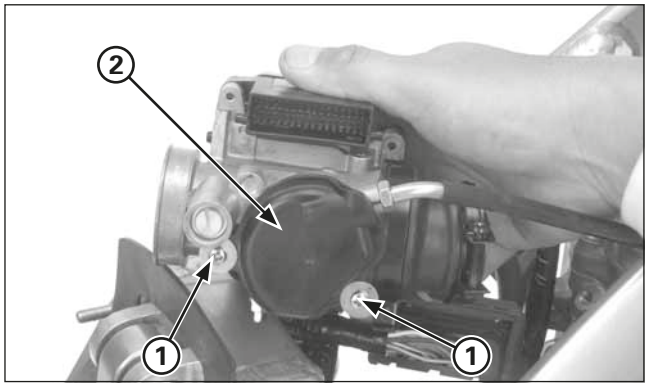

(1) SCREWS
(2) THROTTLE DRUM COVER

Disconnect the ECM 32P (Black) connector by lifting up on the fixation handle.
Loosen the insulator band screw and remove the throttle body.

Remove the screws and throttle drum cover.

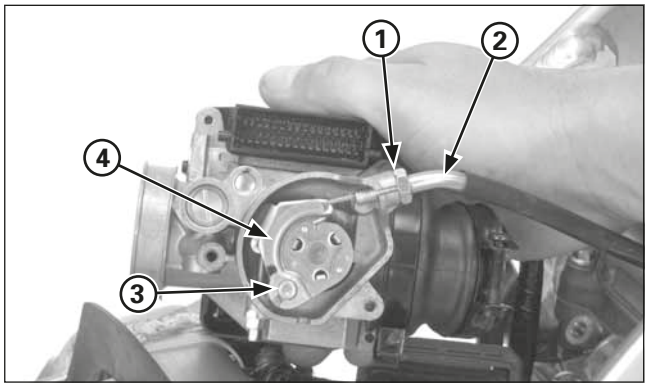

(1) LOCK NUT (2) THROTTLE CABLE
(3) THROTTLE CABLE END (4) THROTTLE DRUM

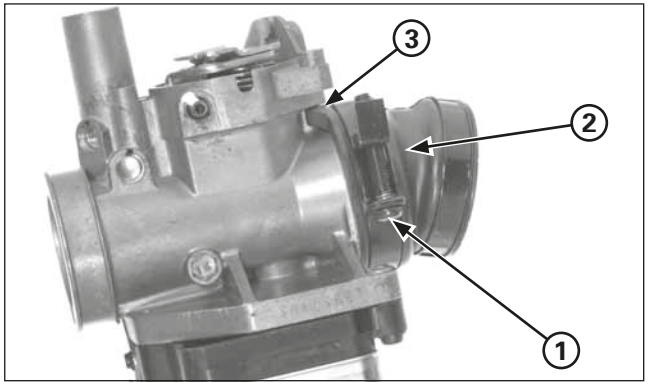

(1) SCREW
(2) INSULATOR
(3) ALIGH

Loosen the lock nut and disconnect the throttle cable from the throttle body.
Disconnect the cable end from the throttle drum.

Loosen the insulator clamp screw and remove the insulator from the throttle body.

Installation
Install the insulator onto the throttle body while aligning the slit with the lug on the throttle body as shown.

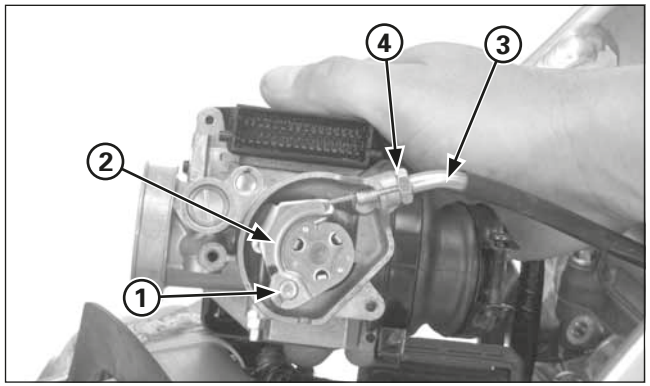

(1) THROTTLE CABLE END (2) THROTTLE DRUM
(3) THROTTLE CABLE (4) LOCK NUT

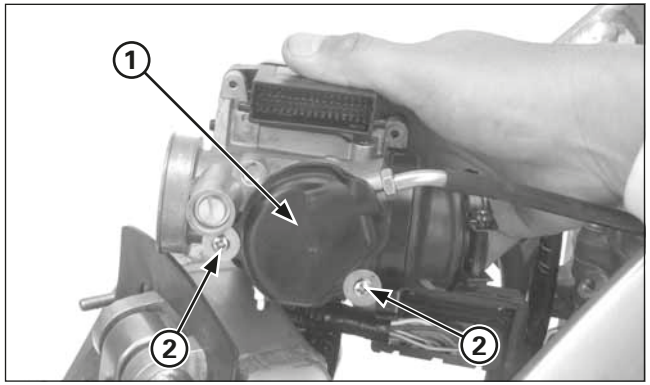

(1) THROTTLE DRUM COVER
(2) SCREWS

Connect the throttle cable end to the throttle drum.
Install the throttel cable to the throttle body.
Adjust the throttle grip free play.

Install the throttle drum cover and tighten the screws.

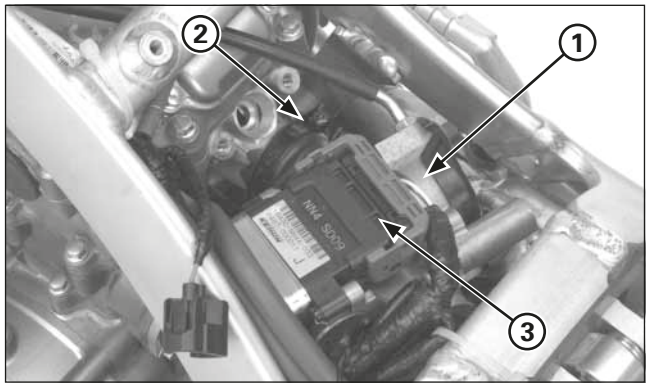

(1) THROTTLE BODY
(2) BAND SCREW
(3) 32P (BLACK) CONNECTOR

Install the throttle body together with insulator at cylinder head inlet port.
Make sure there are the following clearances between the throttle body:
– Throttle body-to-bank angle sensor: more than 5 mm
– Throttle body-to-muffler: more than 5 mm

Adjust the insulator band angle and tighten the band screw securely.

Connect the ECM 32P (Black) connector.

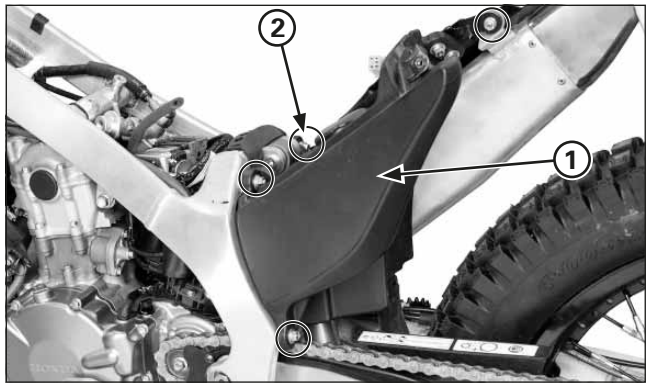

(1) AIR CLEANER HOUSING
(2) BOLTS/NUTS

Install the air cleaner housing onto the frame and connect the crankcase breather hose.

Install and tighten the air cleaner housing mounting nuts and bolt securely.

Install the washer and muffler mounting bolt, then tighten the bolt securely.

Adjust the angle of the connector tube clamp and tighten the screw firmly.

Install the rear fender.

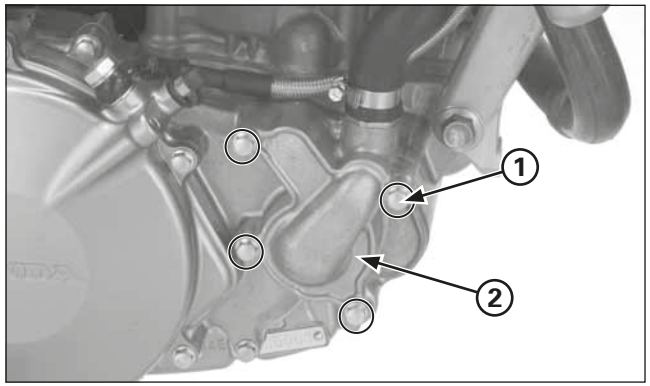

(1) BOLTS
(2) WATER PUMP COVER

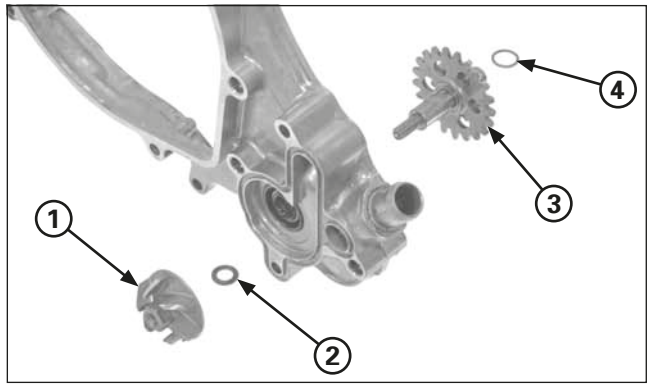

(1) IMPELLER
(2) COPPER WASHER
(3) WATER PUMP SHAFT
(4) WASHER

Water Seal And Bearing Replacement

Drain the transmission oil (page 3-8).

Remove the following:
– Water pump cover bolt/cover/dowel pins/O-ring
– Right crankcase cover and washer (page 4-40)

Hold the water pump gear teeth using a suitable tool, then remove the impeller, copper washer and water pump shaft.

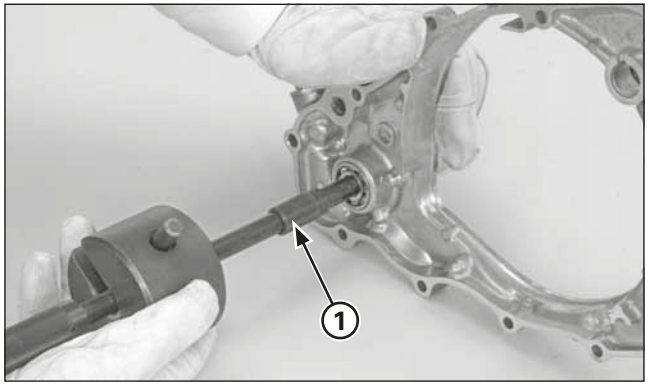

(1) BEARING REMOVER, 12 MM

Remove the water pump bearing from the right crankcase cover using the special tools.

Tools:
Bearing remover, 12 mm 07936-166010A
– Remover handle 07936-3710100
– Remover weight 07936-371020A

Remove the oil seal and water seal.

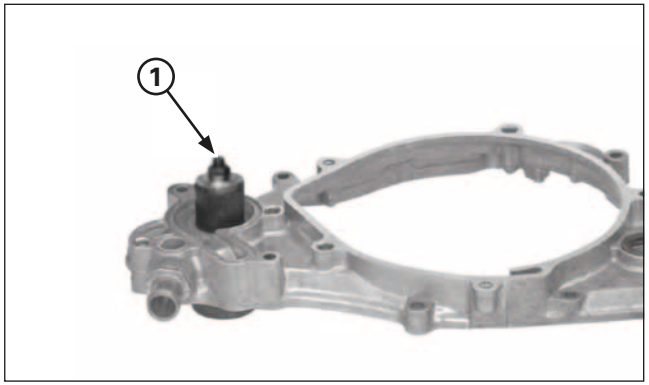

(1) MECHANICAL SEAL INSTALLER

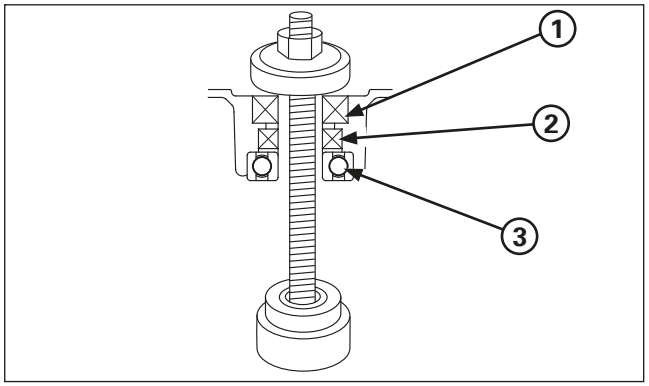

(1) WATER SEAL
(2) OIL SEAL
(3) BEARING

Install the water seal into the right crankcase cover in the direction shown in the illustration above.

Tool:
Mechanical seal installer 07965-415000A

Install a new oil seal in the direction shown in the illustration above.
Drive the new bearing into the right crankcase cover.

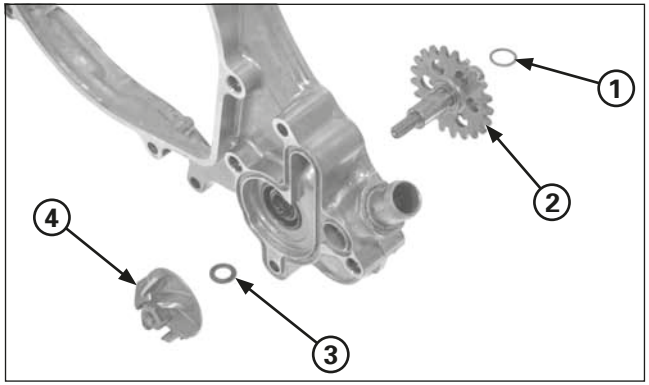

(1) WASHER
(2) WATER PUMP SHAFT
(3) NEW COPPER WASHER
(4) IMPELLER

Install the water pump shaft, new copper washer and impeller into the right crankcase cover.
Hold the water pump gear using a suitable tool and tighten the impeller to the specified torque.

Torque: 12 N•m (1.2 kgf•m, 9 lbf•ft)

Install the washer and right crankcase cover (page 4-41).

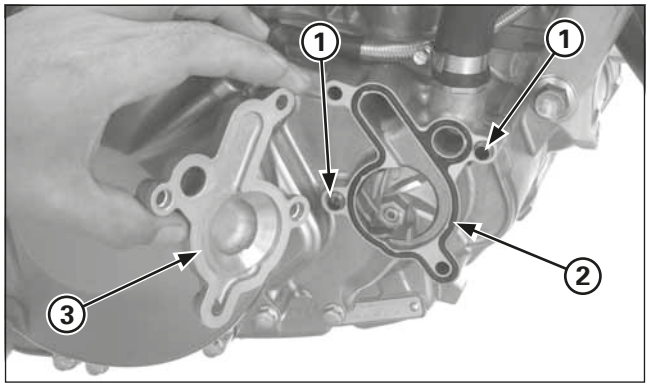

(1) DOWEL PINS
(2) NEW O-RING
(3) WATER PUMP COVER

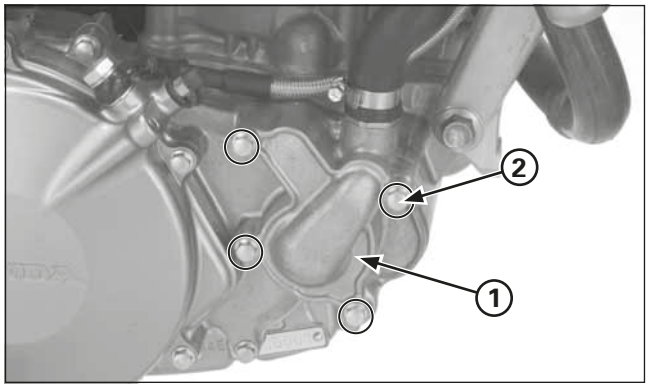

(1) WATER PUMP COVER
(2) BOLTS

Install the following:
– Dowel pins, new O-ring
– Water pump cover, bolts

Fill the crankcase with recommended transmission oil (page 3-8).
Fill the coolant and bleed air (page 3-9).

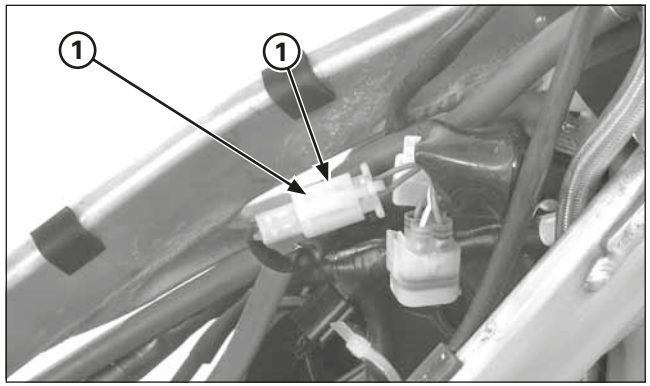

(1) 2P (NATURAL) CONNECTOR

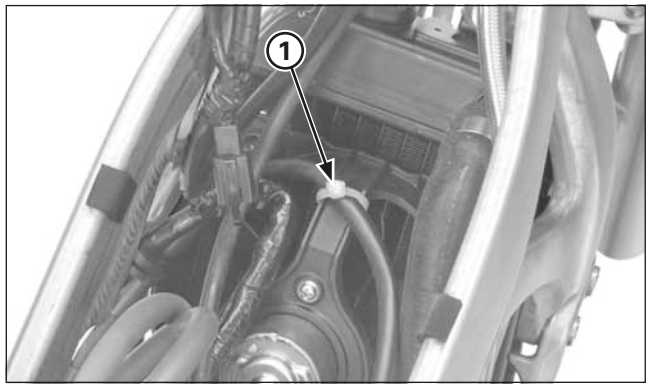

(1) TIE WRAP

Radiator Removal/Installation

Remove the following:

– Exhaust pipe
– Skid plate
– Fuel tank/injector assembly (page 4-7)

Disconnect the radiator 2P (Natural) connector.

Remove the spark plug wire tie-wrap from fan motor shroud.

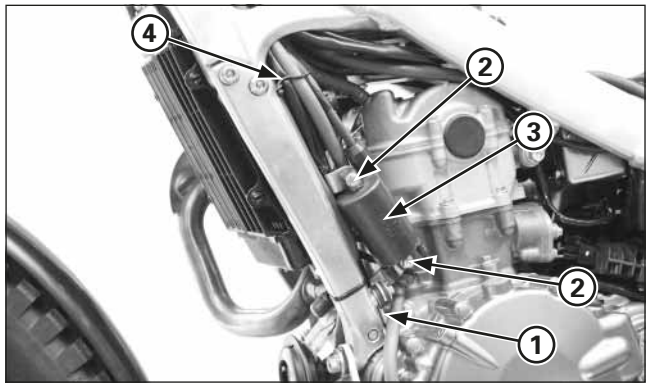

(1) GROUND EYELET
(2) BOLTS
(3) IGNITION COIL
(4) WIRE CLAMP

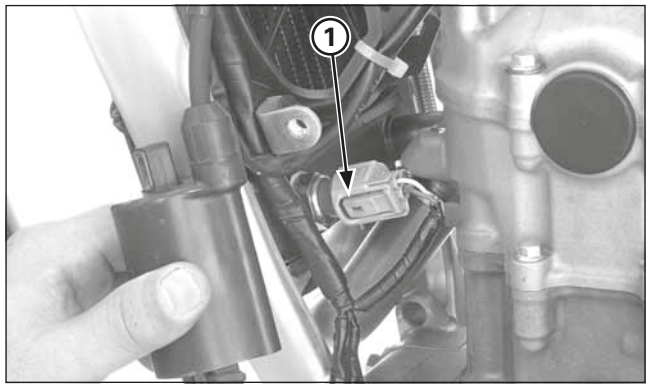

(1) 3P (GRAY) CONNECTOR

Remove the ground eyelet bolt.
Remove the ignition coil mounting bolt.

Remove the spark plug wire/wire harness/breather hose clamp.

Disconnect the ECT sensor 3P (Gray) connector.

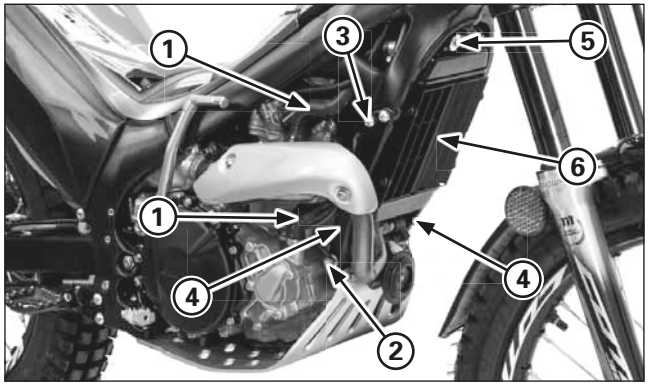

(1) RADIATOR HOSES
(2) HANGER BOLT
(3) DOWN TUBE BOLTS
(4) DOWN TUBE
(5) RADIATOR MOUNTING BOLT
(6) RADIATOR

Disconnect the radiator hoses at the right crankcase cover and cylinder head.
Remove the front engine hanger bolt and front down tube mounting bolts, then remove the down tubes.
Remove the radiator mounting bolt, then remove the radiator assembly.

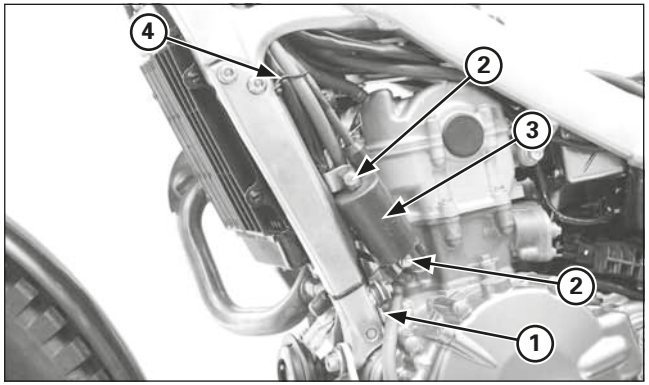

(1) IGNITION COIL
(2) BOLTS
(3) GROUND EYELET
(4) WIRE CLAMP

Installation is in the reverse order of removal.

NOTICE

At ignition coil installation, install the ground eyelet with the ignition coil lower mounting bracket bolt as shown in the illustration.

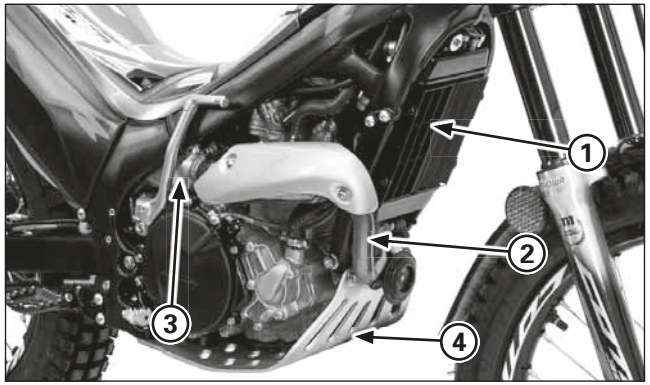

(1) RADIATOR
(2) EXHAUST PIPE
(3) MUFFLER
(4) SKID PLATE

Engine Removal/Installation

- Support the motorcycle securely using a hoist or equivalent.
- The following parts must be removed before engine removal.
  - Exhaust pipe, muffler
  - Skid plate
  - Down tubes, radiator (page 4-17)
  - Air cleaner housing (page 4-10)
- The following components can be serviced with the engine in the frame.
  - Cylinder head
  - Clutch/gearshift linkage
  - Flywheel/stator
  - Kickstarter/gearshift linkage
- The following components require engine removal for servicing.
  - Crankshaft
  - Oil pump
  - Shift forks and shift drum
  - Transmission
  - Cylinder/piston

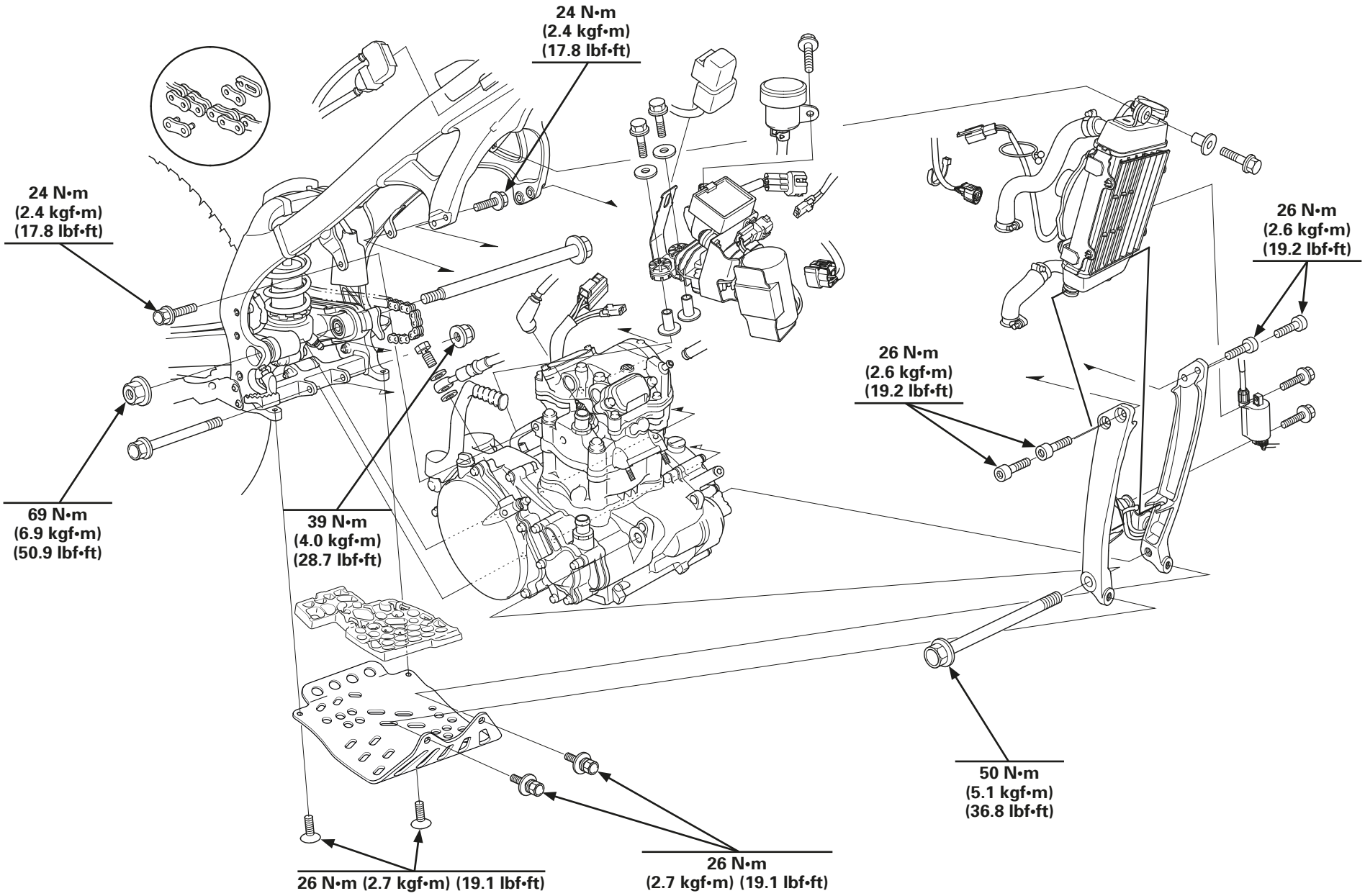
24 N•m
(2.4 kgf•m)
(17.8 lbf•ft)
24 N•m
(2.4 kgf•m)
(17.8 lbf•ft)
26 N•m
(2.6 kgf•m)
(19.2 lbf•ft)
26 N•m
(2.6 kgf•m)
(19.2 lbf•ft)
69 N•m
(6.9 kgf•m)
(50.9 lbf•ft)
39 N•m
(4.0 kgf•m)
(28.7 lbf•ft)
50 N•m
(5.1 kgf•m)
(36.8 lbf•ft)
26 N•m (2.7 kgf•m) (19.1 lbf•ft)
26 N•m
(2.7 kgf•m) (19.1 lbf•ft)

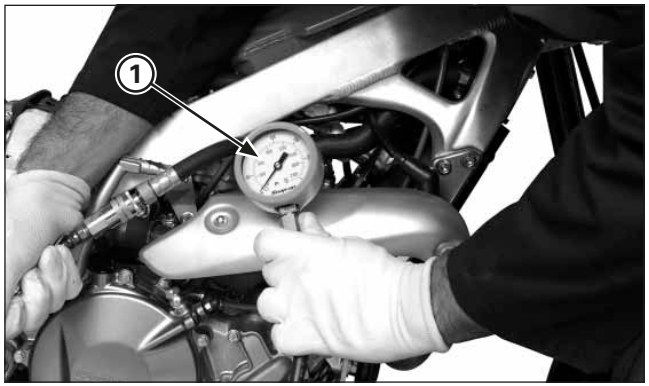

(1) CYLINDER COMPRESSION GAUGE

Cylinder Compression

Warm up the engine to normal operating temperature.
Stop the engine and remove the spark plug.
Install a compression gauge.
Shift the transmission into neutral.
Open the throttle all the way and crank the engine with the kickstarter until the gauge reading stops rising.

Compression pressure:
189 psi (1,300 kPa, 13.3 kgf/cm²)

Low compression can be caused by:
– Blown cylinder head gasket
– Improper valve adjustment
– Valve leakage
– Worn piston ring or cylinder

High compression can be caused by:
– Incorrect valves adjustment

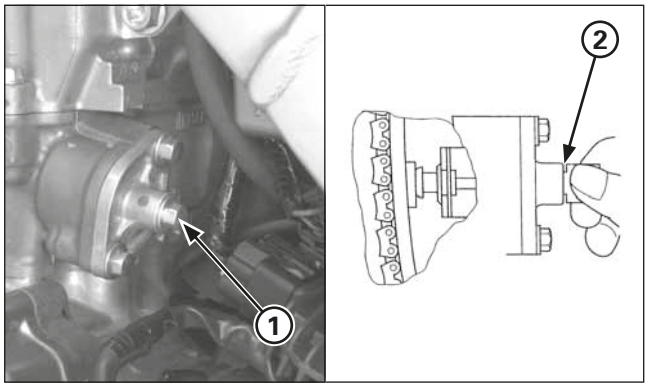

(1) SEALING BOLT/WASHER
(2) STOPPER TOOL

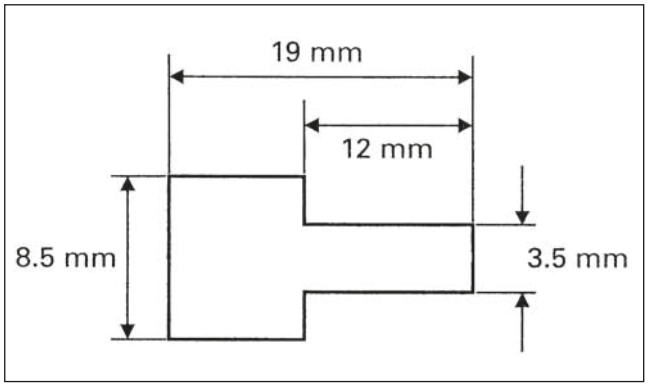

Cylinder Head Cover/Camshaft Removal

Remove the cam chain tensioner lifter sealing bolt and sealing washer.

Turn the tensioner lifter clockwise fully and secure it with the tensioner holder.
This tool can be easily be made from a thin (1 mm thick) piece of steel as shown.

Tool:
Tensioner holder 07AMG-001A100

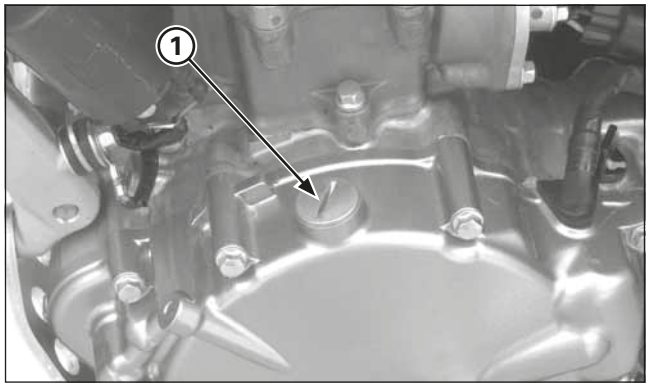

(1) TIMING HOLE CAP

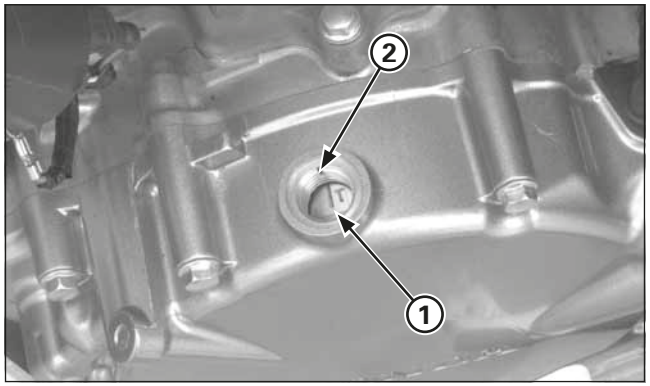

(1) "T" MARK
(2) INDEX MARK

Remove the fuel tank/injector.

Remove the timing hole cap and O-ring from the left crankcase cover.

Turn the crankshaft by operating the kickstarter and align the "T" mark on the flywheel with the index mark on the left crankcase cover.

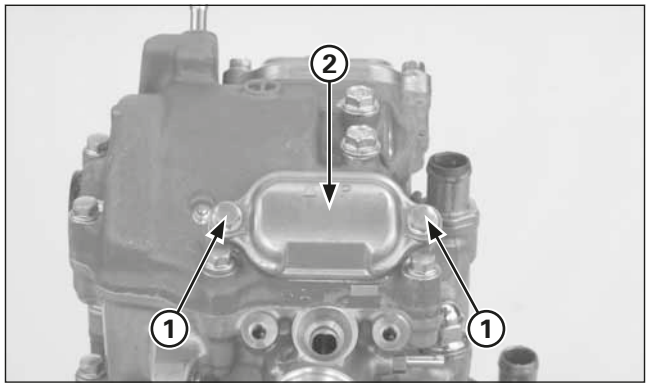

(1) BOLTS
(2) TAPPET ADJUSTING HOLE COVER

Remove the bolts and tappet adjusting hole covers.

Make sure the piston at TDC (Top Dead Center) on the compression stroke by moving the rocker arms.

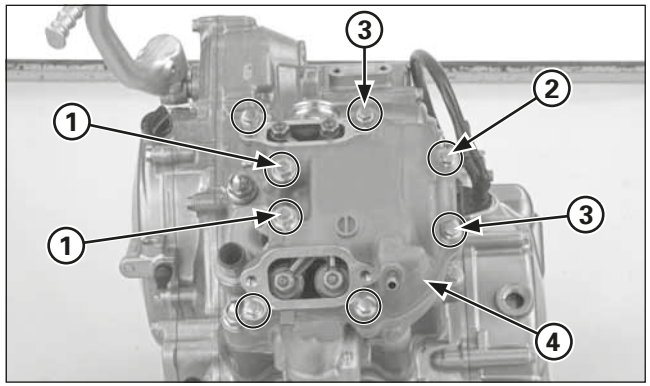

(1) BOLTS/SEALING WASHERS (2) SH BOLTS
(3) SEALING WASHERS (4) CYLINDER HEAD COVER

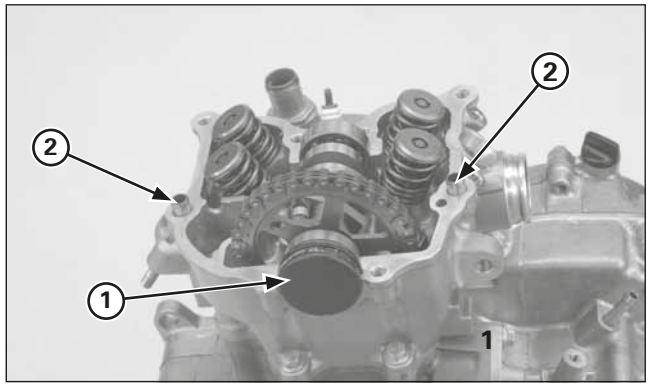

(1) SIDE CAP
(2) DOWEL PINS

Disconnect the crankcase breather hose.
Remove the two 6 mm bolts.
Loosen the eight cylinder head cover SH bolts in crisscross pattern in 2 or 3 steps.
Remove the bolts and four sealing washers.
Remove the cylinder head cover assembly.

Remove the dowel pins.
Remove the cylinder head side cap.
Remove the camshaft bearing retainer from the cylinder head cover.

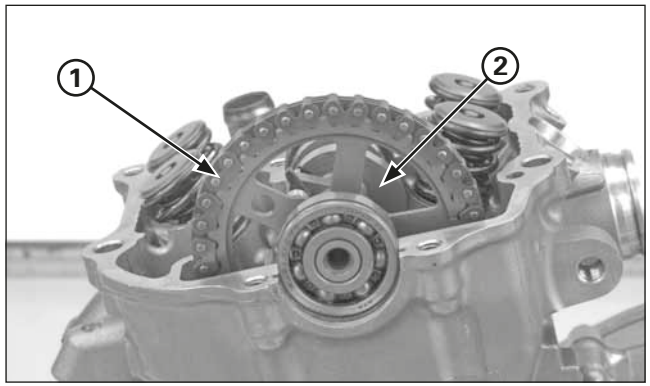

(1) CAM CHAIN
(2) CAMSHAFT

Remove the cam chain from the cam sprocket and suspend the cam chain with a piece of wire to prevent it from falling into the crankcase.

Remove the camshaft assembly.

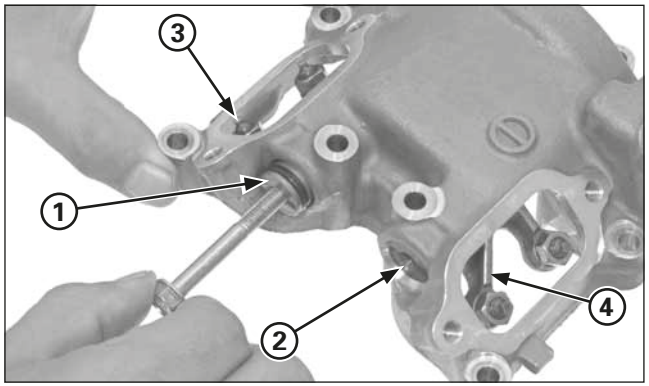

(1) INTAKE ROCKER ARM SHAFT
(2) EXHAUST ROCKER ARM SHAFT
(3) INTAKE ROCKER ARM
(4) EXHAUST ROCKER ARM

Disassembly

Pull out the rocker arm shafts using a suitable 6 mm bolt and remove the intake and exhaust rocker arms.

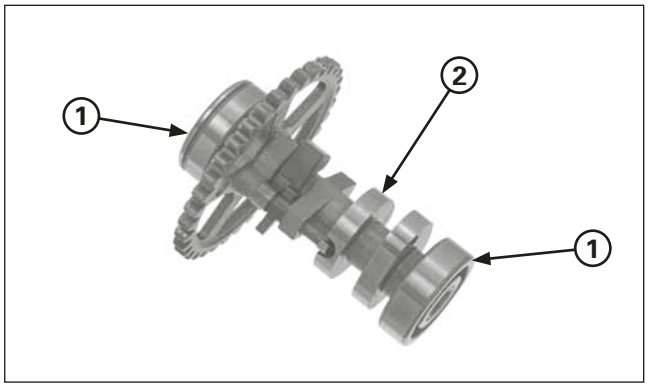

(1) BEARINGS
(2) CAMSHAFT

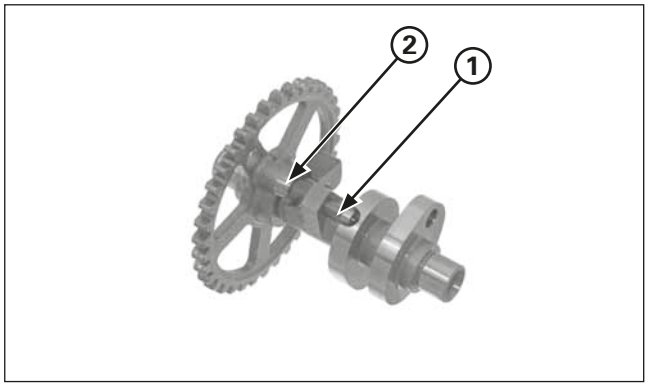

(1) DECOMPRESSOR
(2) RETURN SPRING

Inspection

Remove the bearings from the camshaft.
Turn the inner race of each bearing with your finger.
The bearing should turn smoothly and quietly.
Replace the bearing if the bearing do not turn smoothly and quietly.

Check the decompressor cam for wear or damage.
If any components are faulty, replace the camshaft assembly.

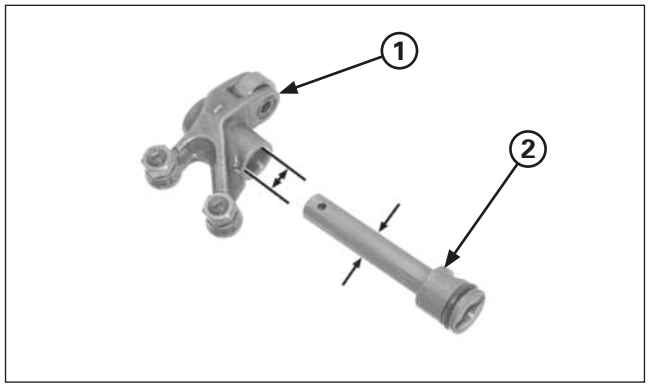

(1) ROCKER ARM
(2) ROCKER ARM SHAFT

Check the rocker arms and shafts for wear or damage.
Measure the rocker arm I.D.

Service limit: 10.051 mm (0.3957 in)

Measure the rocker arm shaft O.D. at rocker arm sliding portion.

Service limit: 9.925 mm (0.3907 in)

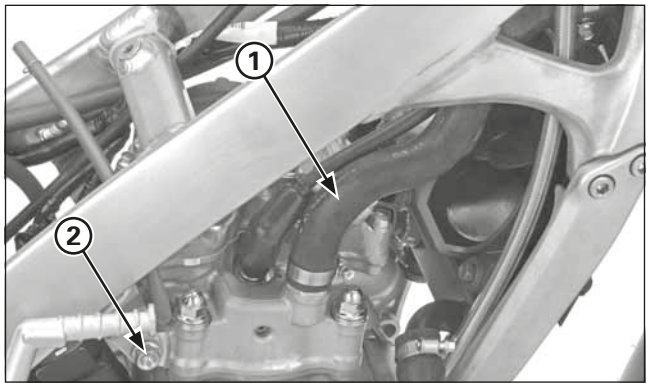

(1) RADIATOR HOSE
(2) HANGER BOLTS

Cylinder Head Removal

Remove the following:
– Exhaust pipe
– Throttle body/insulator
– Cylinder head cover/camshaft
– Spark plug

Drain the coolant.
Loosen the hose band screw and disconnect the upper radiator hose from the cylinder head.

Remove the upper engine hanger bolts.

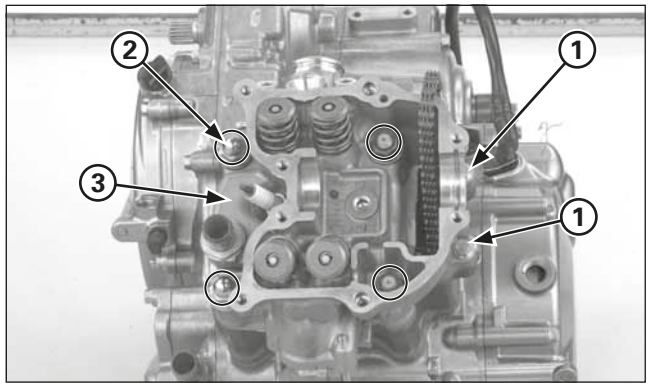

(1) BOLTS
(2) NUTS/WASHERS
(3) CYLINDER HEAD

Remove the cylinder head mounting bolts.
Loosen the cylinder head mounting nuts in a crisscross pattern in two or three steps.
Remove the nuts, washers and cylinder head.

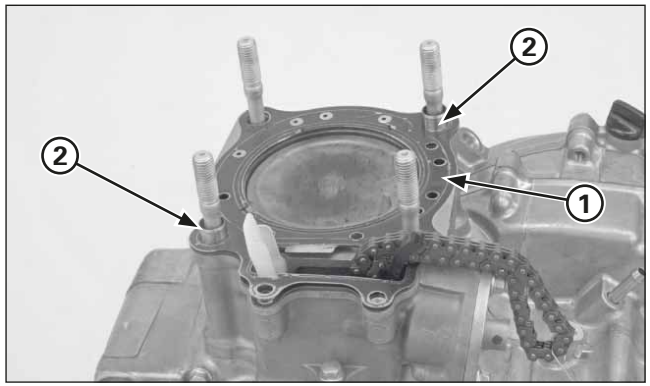

(1) GASKET
(2) DOWEL PINS

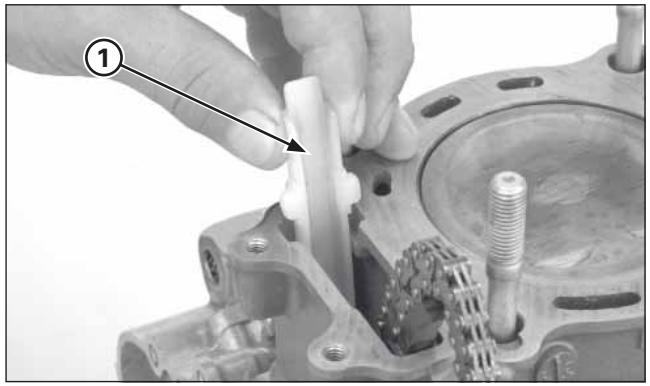

(1) CAM CHAIN GUIDE

Remove the gasket and dowel pins.

Remove the cam chain guide.

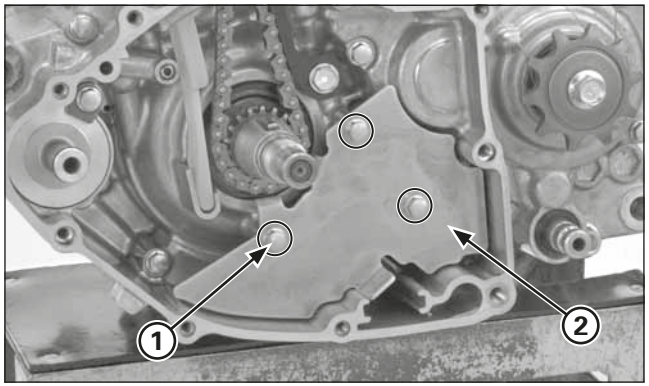

(1) BOLTS
(2) CAM CHAIN GUIDE PLATE

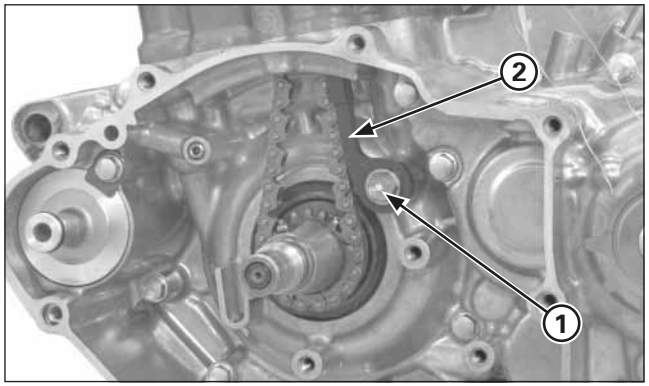

(1) BOLT
(2) CAM CHAIN TENSIONER

Remove the following:
– Cylinder head (page 4-23)
– Left crankcase cover (page 4-49)
– Flywheel (page 4-52)

Remove the bolts and cam chain guide plate.

Remove the bolt, cam chain tensioner, pivot collar and washer.

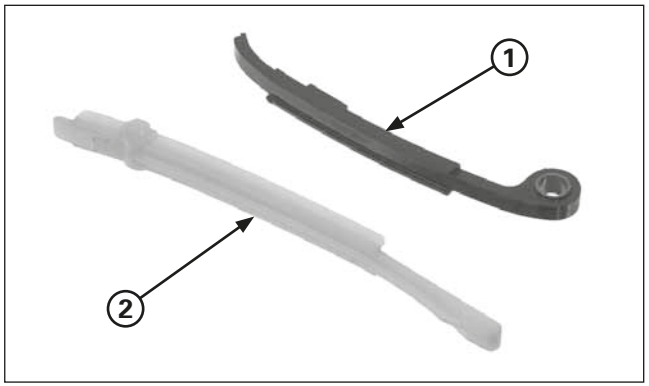

(1) CAM CHAIN TENSIONER
(2) CAM CHAIN GUIDE

Inspection

Inspect the cam chain tensioner and cam chain guide for excessive wear or damage, replace if necessary.

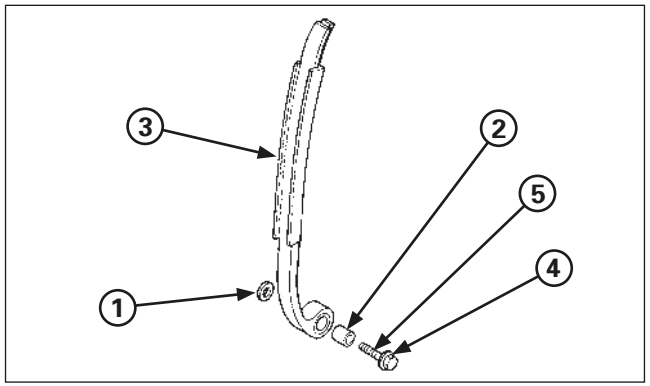

(1) WASHER (2) PIVOT COLLAR
(3) CAM CHAIN TENSIONER
(4) PIVOT BOLT (5) APPLY LOCKING AGENT

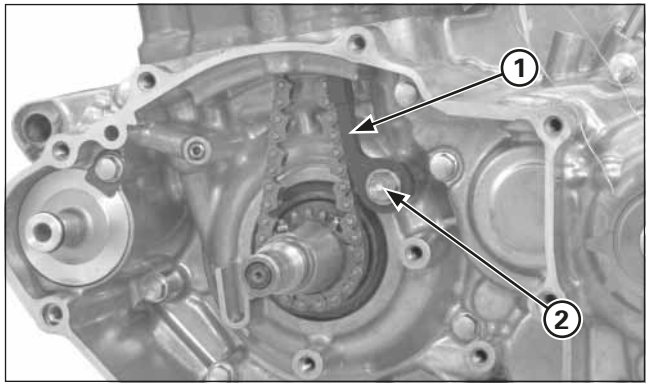

(1) CAM CHAIN TENSIONER
(2) PIVOT BOLT

Installation

Apply a locking agent to the cam chain tensioner pivot bolt thread.
Install the washer, cam chain tensioner, pivot collar and pivot bolt.
Tighten the pivot bolt to the specified torque.

Torque: 12 N•m (1.2 kgf•m, 9 lbf•ft)

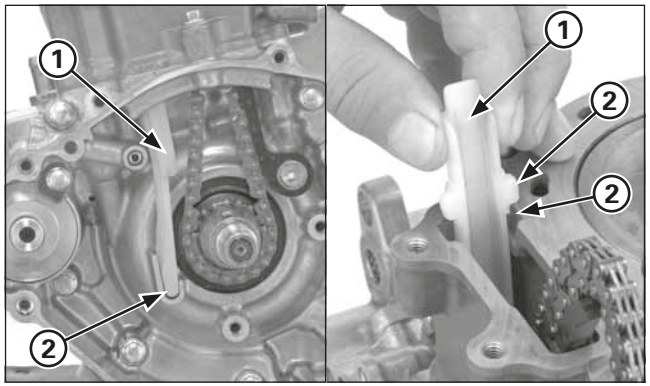

(1) CAM CHAIN GUIDE
(2) ALIGN

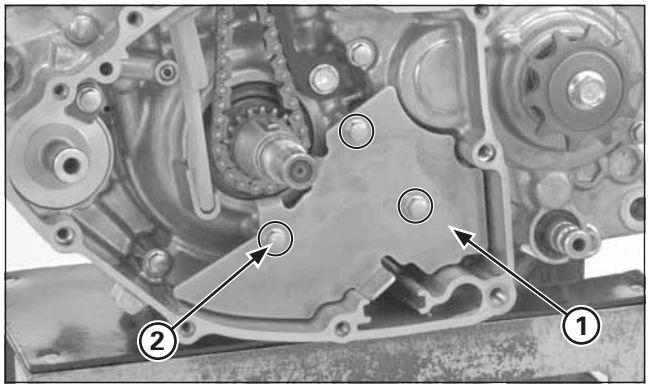

(1) CAM CHAIN GUIDE PLATE
(2) BOLTS

Install the cam chain guide by aligning the guide end with the groove in the crankcase and the tab with the groove in the cylinder.

Install the cam chain guide plate and tighten the bolts.

Install the following:
– Flywheel (page 4-52)
– Left crankcase cover (page 4-49)
– Cylinder head (page 4-37)

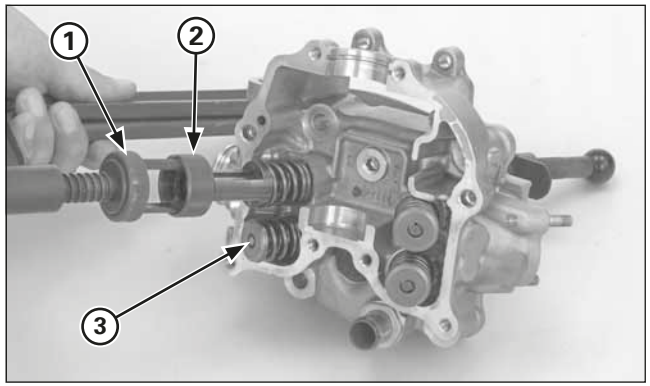

(1) VALVE SPRING COMPRESSOR
(2) ATTACHMENT
(3) COTTERS

Cylinder Head Disassembly

Remove the cylinder head (page 4-23).

Remove the valve spring cotters using the special tools. To prevent loss of tension, do not compress the valve springs more than necessary to remove the cotters.

Tools:

Valve spring compressor	**07757-0010000**
Compressor attachment	**07959-KM30101**

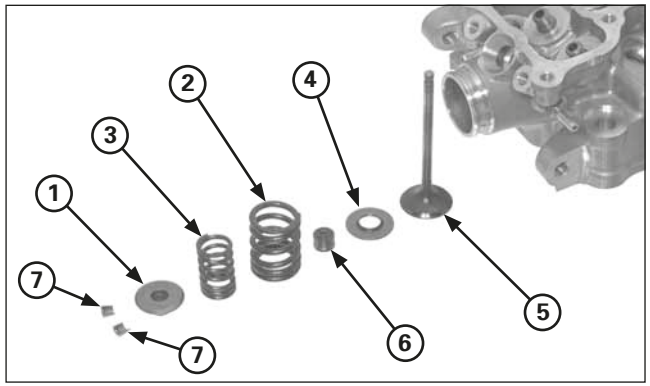

(1) RETAINER
(2) OUTER SPRING
(3) INNER SPRING
(4) SPRING SEAT
(5) VALVE
(6) STEM SEAL
(7) COTTERS

Remove the following:
– Spring retainer
– Outer and inner valve springs
– Stem seal
– Valve spring seat
– Intake and exhaust valve

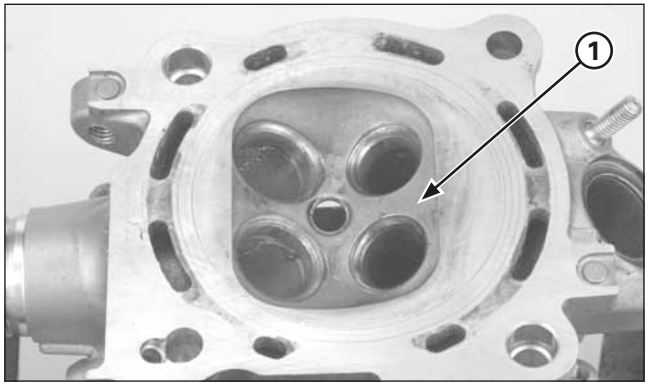

(1) COMBUSTION CHAMBER

Cylinder Head Inspection

Cylinder Head

Remove the carbon deposits from the combustion chamber or exhaust port.
Use care not to scratch the combustion chamber or the head gasket surface.

Check the spark plug hole and valve area for cranks.

Check the cylinder head for warpage with a straight edge and feeler gauge.

Service limit: 0.05 mm (0.002 in)

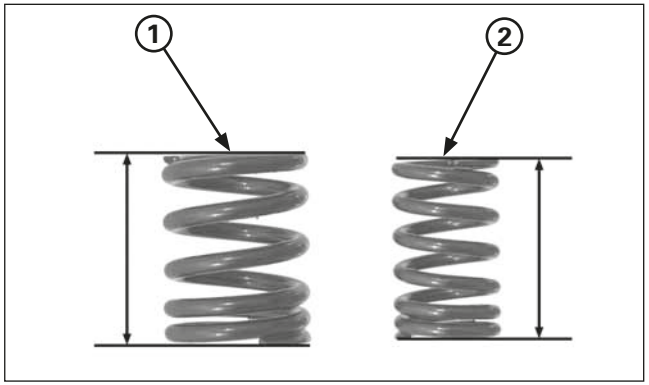

(1) OUTER VALVE SPRING
(2) INNER VALVE SPRING

Valve spring

Check the valve springs for fatigue or damage.
Measure the free length of the intake and exhaust valve springs.

Service limits:
Inner: 24.9 mm (0.98 in)
Outer: 27.6 mm (1.09 in)

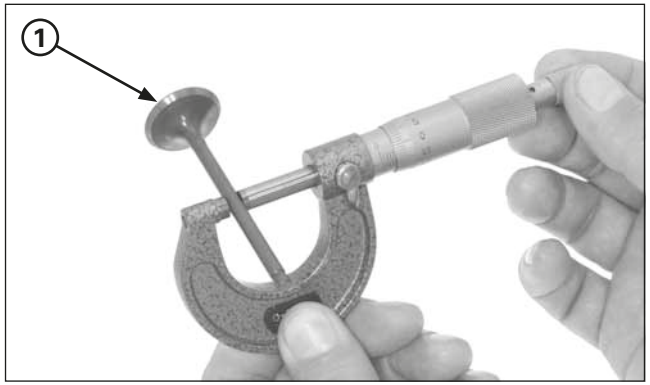

(1) VALVE

Valve/Valve Guide

Inspect each valve for out-of-round, burns, scratches or abnormal stem wear.

Check the valve movement in the guide.
Measure and record the valve stem O.D.

Service limits:
IN: 4.470 mm (0.1760 in)
EX: 4.460 mm (0.1756 in)

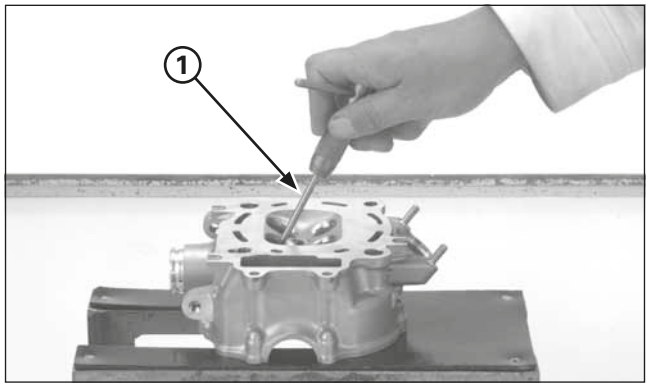

(1) VALVE GUIDE REAMER

Ream the valve guide to remove any carbon build-up before measuring the guide.
Insert the reamer from the combustion chamber side of the head and always rotate the reamer clockwise.

Tool:
Valve guide reamer, 4.508 mm 07HMH–ML0010B

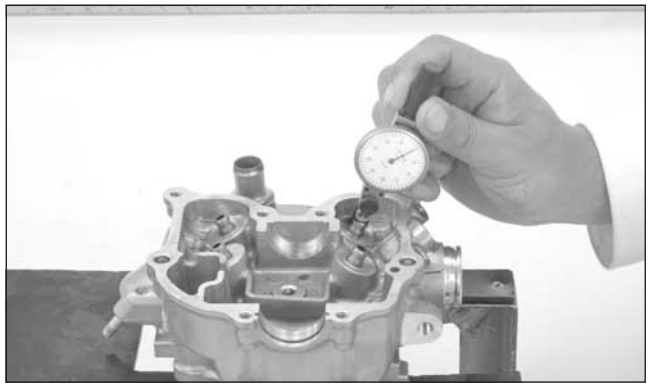

Measure and record the valve guide I.D. using a ball gauge or inside micrometer.

Service limit:
IN/EX: 4.552 mm (0.1792 in)

Subtract each valve stem O.D. from the corresponding guide I.D. to obtain the stem-to-guide clearance.

Standard:
IN: 0.010 – 0.037 mm (0.0004 – 0.0015 in)
EX: 0.020 – 0.047 mm (0.0008 – 0.0019 in)

If the stem-to-guide clearance exceeds the service limits, determine if a new guide with standard dimensions would bring the clearance within tolerance.
If so, replace the guides as necessary and ream to fit.
Reface the valve seats whenever the valve guides are replaced (page 4-28).

If the stem-to-guide clearance exceeds the service limits with new guides also, replace the valves and guides.

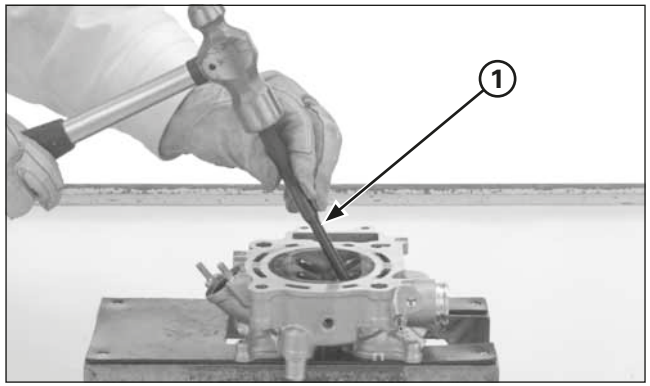

(1) VALVE GUIDE DRIVER

Valve Guide Replacement

Mark new valve guides at the proper depth (see specification; page 2-3) using a marker.
Chill the new valve guides in a freezer for about 1 hour.
Heat the cylinder head to 100 – 150 °C (212 – 300 °F) with a hot plate or oven.
Do not heat the cylinder head beyond 180 °C (320 °F).
Use temperature indicator sticks, available from welding supply stores, to be sure the cylinder head is heated to the proper temperature.
Using a torch to heat the cylinder head may cause warpage.

Support the cylinder head and drive the valve guides out of the cylinder head from the combustion chamber side.

Tool:
Valve guide driver 07HMD–ML00101

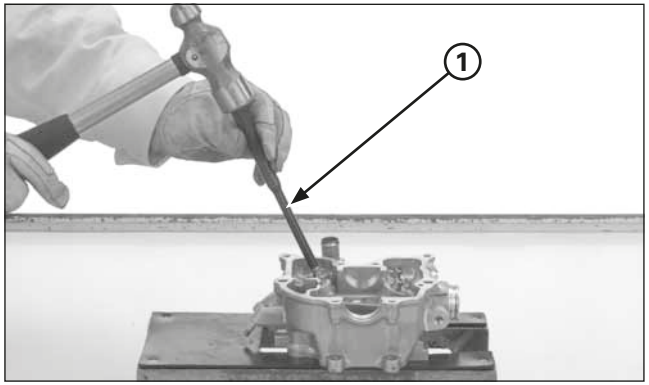

(1) VALVE GUIDE DRIVER

Remove the guide from the freezer.
While the cylinder head is still heated, drive new valve guides into the cylinder head from the top of the cylinder (camshaft side).
Drive the guides until the marks are parallel with the cylinder head.

Tool:
Valve guide driver 07HMD–ML00101

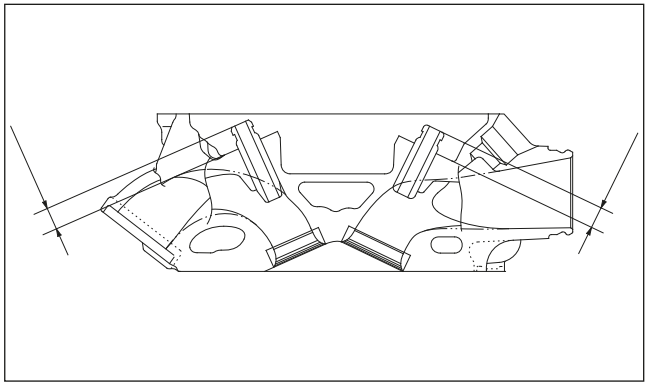

Check that the valve guides are at the proper depth using a slide caliper, adjust the height if necessary.

Specified depth:
IN: 8.0 – 8.3 mm (0.31 – 0.33 in)
EX: 8.2 – 8.5 mm (0.32 – 0.33 in)

Let the cylinder head cool to room temperature.

Ream the new valve guides.
Insert the reamer from the combustion chamber side of the cylinder head and always rotate the reamer clockwise.
Use cutting oil on the reamer during this operation.
Take care not to tilt or lean the reamer in the guide while reaming.

Tool:
Valve guide reamer, 4.508 mm 07HMH–ML0010B

Clean the cylinder head thoroughly to remove any metal particles after reaming and reface the valve seats.

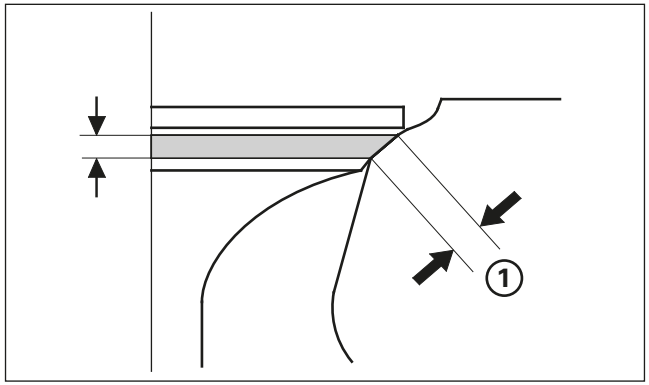

(1) VALVE SEAT WIDTH

Valve Seat Inspection/Refacing

Clean the intake and exhaust valves thoroughly to remove carbon deposits.
Apply a light coating of Prussian Blue to the valve seat.

Tap the valves and seats using a rubber hose or other hand lapping tool.

Remove the valve and inspect the valve seat face.
The valve seat contact should be within the specified width and even all around the circumference.

Standard:
IN/EX: 0.9 – 1.1 mm (0.035 – 0.043 in)

Service limit:
IN/EX: 1.7 mm (0.07 in)

If the seat width is not within specification, reface the valve seat (page 4-29).

Inspect the valve seat face for:
- Uneven seat width:
  – Replace the valve and reface the valve seat.
- Damaged face:
  – Replace the valve and reface the valve seat.

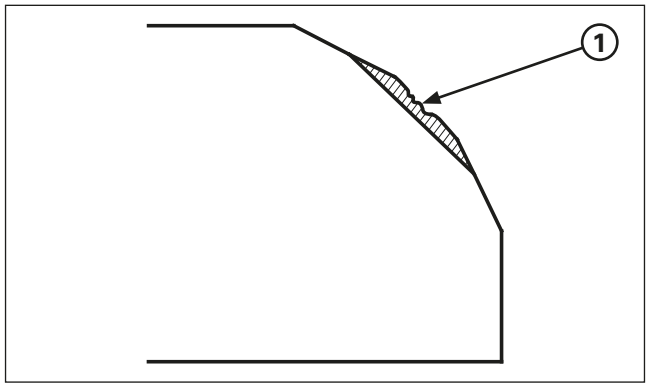

(1) ROUGHNESS

- Contact area (too high or too low)
  – Reface the valve seat.

The valves cannot be ground, If a valve face is burned or badly worn or if it contacts the seat unevenly, replace the valve.

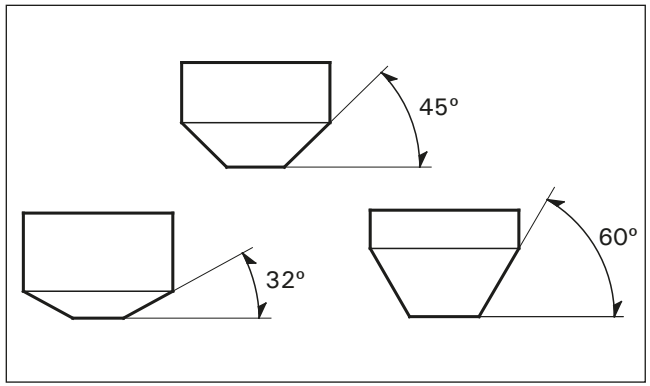

Valve Seat Refacing

Valve seat cutters, grinders, or equivalent valve seat refacing equipment are recommended to correct worn valve seat.
Follow the refacing manufacturer's instructions.

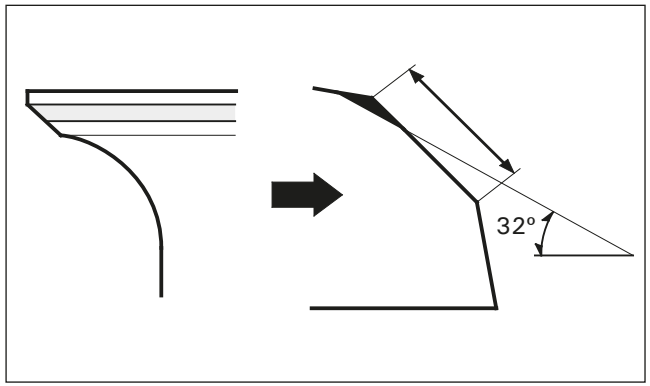

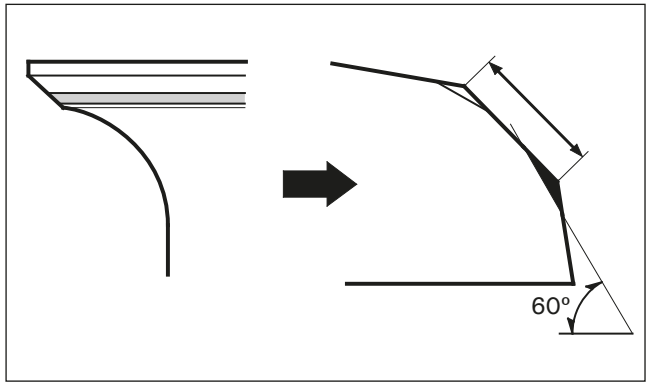

If the contact area is too high on the valve, the seat must be lowered using a 32° flat cutter.

If the contact area is too lower on the valve, the seat must be raised using a 60° interior cutter.

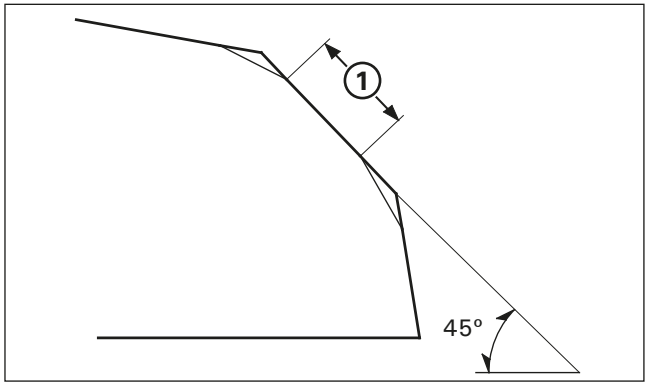

(1) SEAT WIDTH

Use a 45˚ cutter, remove any roughness or irregularities from the seat.
Reface the seat with a 45˚ cutter whenever a valve guide is replaced.

Tools:
Seat cutter, 24.5 mm 07780-0010100
Seat cutter, 22 mm 07780-0010701
Cutter holder, 4.5 mm 07781-0010600
or equivalent commercially available

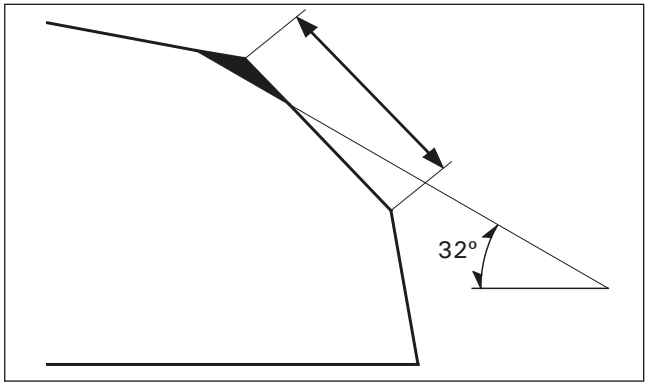

Use a 32˚ flat cutter, remove 1/4 of the existing valve seat material.

Tools:
Flat cutter, 25 mm 07780-0012000
Flat cutter, 21.5 mm 07780-0012800
Cutter holder, 4.5 mm 07781-0010600
or equivalent commercially available

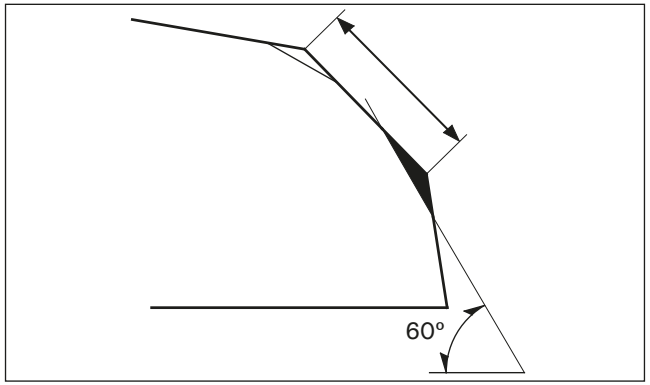

Use a interior cutter, remove 1/4 of the existing valve seat material.

Tools:
Interior cutter, 26 mm 07780-0014500
Interior cutter, 22 mm 07780-0014202
Cutter holder, 4.5 mm 07781-0010600
or equivalent commercially available

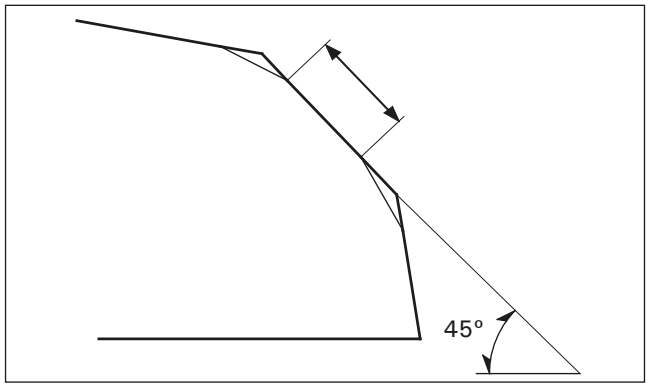

Using a 45° seat cutter, cut the seat to proper width.
Make sure all pitting and irregularities are removed.
Refinish if necessary.

After refacing, wash the cylinder head and valves.
After cutting the seats, apply lapping compound to the valve face, and lap the valve using light pressure.
After lapping, wash any residual compound off the cylinder head and valve.

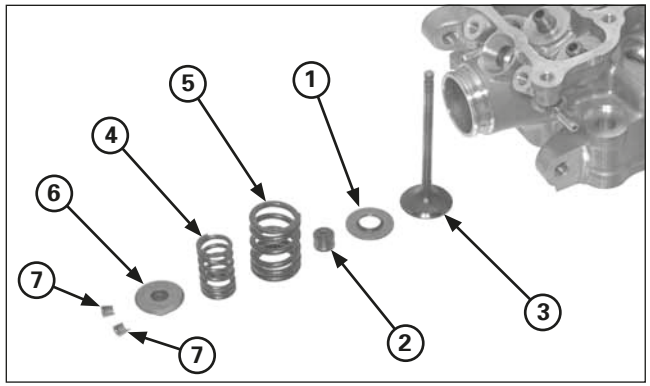

(1) SPRING SEAT
(2) STEM SEAL
(3) VALVE
(4) INNER SPRING
(5) OUTER SPRING
(6) RETAINER
(7) COTTERS

Cylinder Head Assembly

Blow out all oil passages in the cylinder head with compressed air.
Install the spring seat and new stem seal.

Lubricate the valve stem sliding surface with molybdenum solution.
Insert the valves into the guide while turning it slowly to avoid damage to the stem seal.

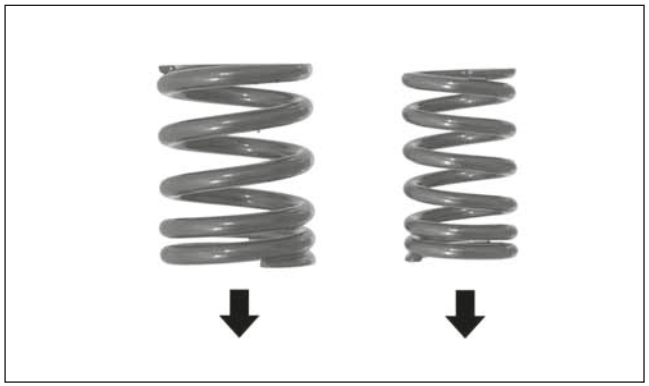

Install the valve springs with the tightly wound coils facing the combustion chamber.
Install the spring retainers.

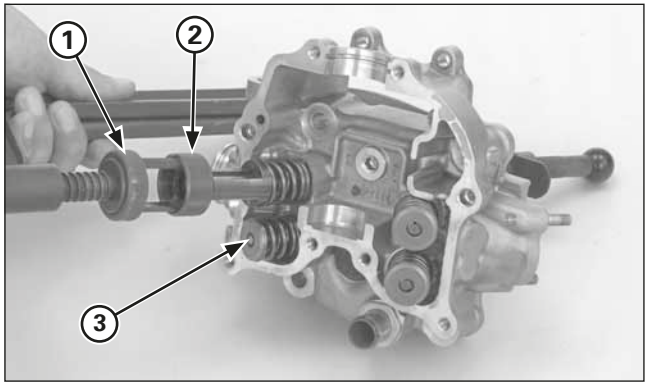

(1) VALVE SPRING COMPRESSOR
(2) ATTACHMENT
(3) COTTERS

Compress the valve springs with the special tools and install the cotters.
Grease the cotters to ease installation.

Tools:

Valve spring compressor	**07757-0010000**
Compressor attachment	**07959-KM30101**

To prevent loss of tension, do not compress the valve springs more than necessary.

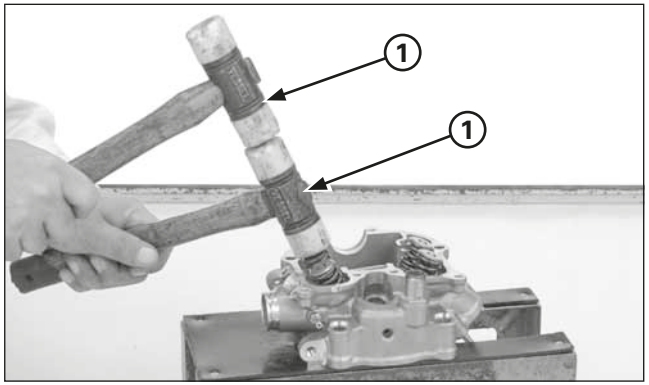

(1) PLASTIC HAMMERS

Tap the valve stems gently with two plastic hammers as shown to seat the cotters firmly.
Support the cylinder head so the valve heads do not contact anything that may damage them.

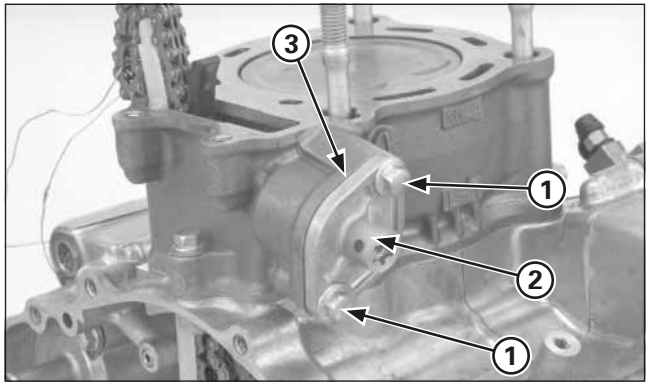

(1) BOLTS
(2) CAM CHAIN TENSIONER LIFTER
(3) GASKET

Cylinder/Piston

Cylinder Removal

Remove the cylinder head (page 4-23).

Remove the bolts, cam chain tensioner lifter and gasket.

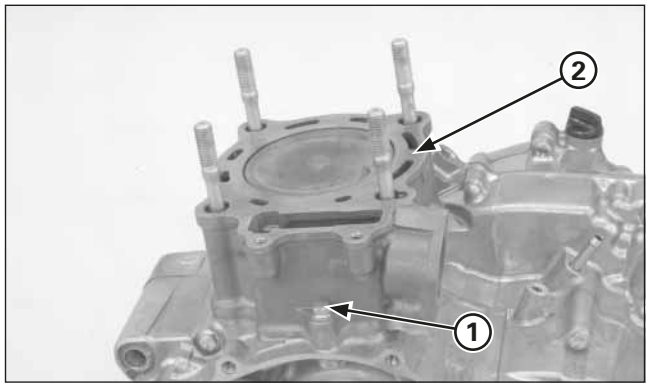

(1) SEALING BOLT/SEALING WASHER
(2) CYLINDER

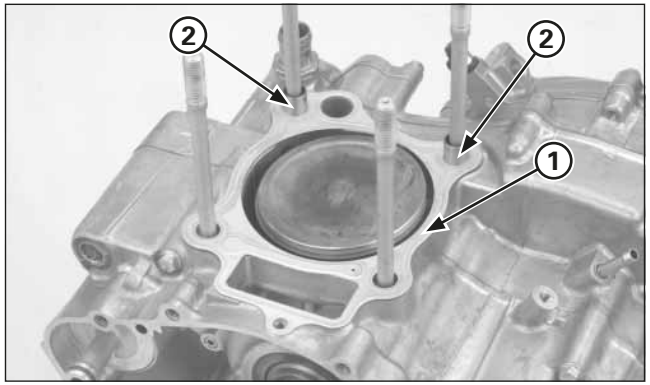

(1) GASKET
(2) DOWEL PINS

Remove the mounting sealing bolt, sealing washer and cylinder.

Remove the gasket and dowel pins.

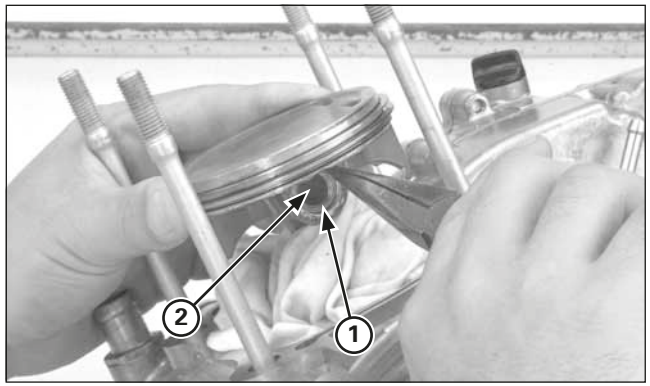

(1) PISTON PIN CLIP
(2) PISTON PIN

Piston Removal

Place a clean shop towel over the crankcase to prevent the clip from falling the crankcase.
Remove the piston pin clips with pliers.

Press the piston pin out of the piston and remove the piston.

Spread the piston rings and remove them by lifting up at a point just opposite the gap.

Piston rings are easily broken; take care not to damage them during removal.

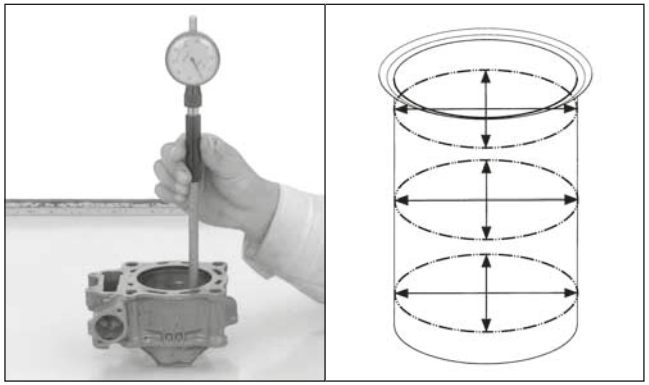

Inspection

Cylinder
Inspect the cylinder bore for wear or damage.
Measure the cylinder I.D. in the X and Y axis at three levels.
Take the maximum reading to determine the cylinder wear.

Service limit: 81.545 mm (3.2104 in)

Calculate the taper and out-of-round at three levels in the X and Y axis. Take maximum reading to determine the cylinder condition.

Service limit:
Taper: 0.05 mm (0.002 in)
Out-of-round: 0.05 mm (0.002 in)

Inspect the top of the cylinder for warpage.

Service limit: 0.05 mm (0.002 in)

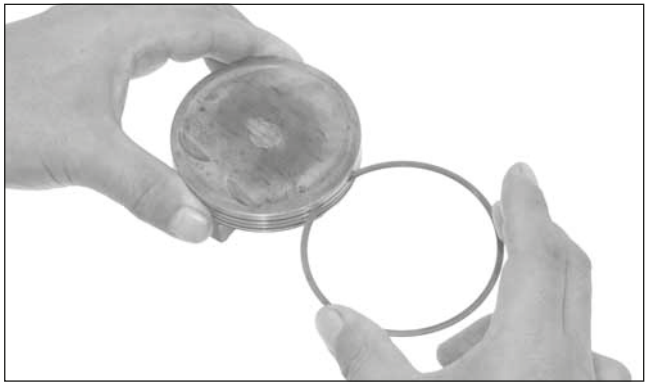

Piston/Piston Ring
Remove the carbon deposits from the piston head or piston ring grooves using old piston rings.
Inspect the piston for damage and the ring grooves for wear.

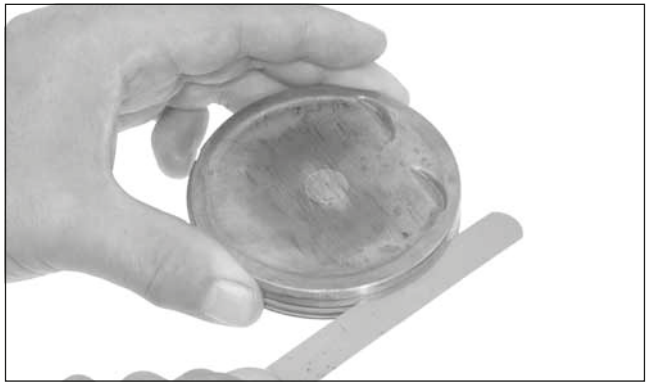

Temporarily install the piston rings to their proper position with the mark facing up.
Measure the piston ring groove clearance with the rings pushed into the grooves.

Service limit:
Top: 0.125 mm (0.0049 in)
Second: 0.075 mm (0.0003 in)

Inspect the piston ring grooves for wear or damage.

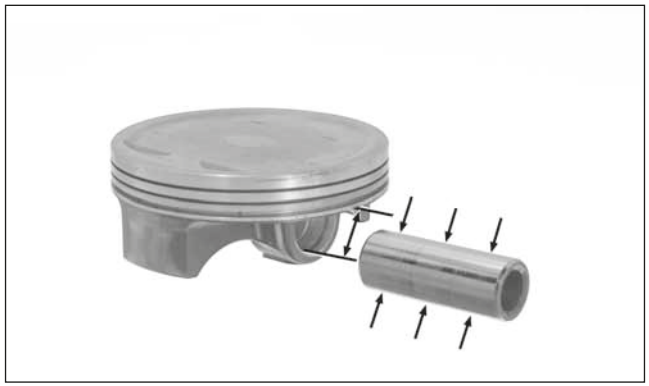

Measure the O.D. of the piston at 3.0 mm (0,0118 in) from bottom of skirt and 90 degrees to the piston pin hole.

Service limit: 81.455 mm (3.2069 in)

If the O.D. is under the service limit, replace the piston with a new one.

Calculate the piston-to-cylinder clearance.

Service limit: 0.18 mm (0.007 in)

Measure the piston pin bore I.D.

Service limit: 16.03 mm (0.631 in)

Check the piston pin for wear or excessive discoloration.
Measure the piston pin O.D.

Service limit: 15.98 mm (0.629 in)

Replace the piston pin if necessary.

Calculate the piston pin-to-piston clearance.

Service limit: 0.04 mm (0.002 in)

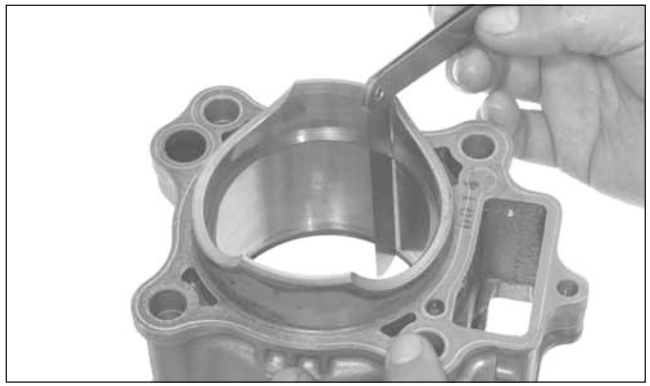

Insert each piston ring into the cylinder and measure the ring end gap.
Push the ring into the cylinder with the top of the piston to be sure the ring is squarely in the cylinder.

Service limit:

Top:	**0.44 mm (0,017 in)**
Second:	**0.64 mm (0.025 in)**
Oil (side rail):	**0.90 mm (0.035 in)**

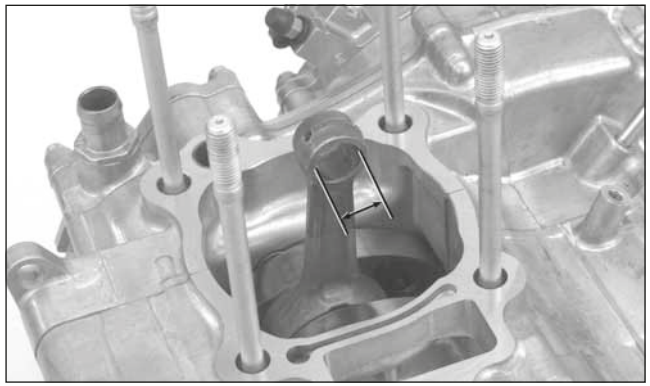

Connecting Rod
Measure the connecting rod small end I.D.

Service limit: 16.04 mm (0.631 in)

If the I.D. is not over the service limit, replace the piston pin.
If the I.D. is over the service limit, replace the crankshaft (page 4-54).

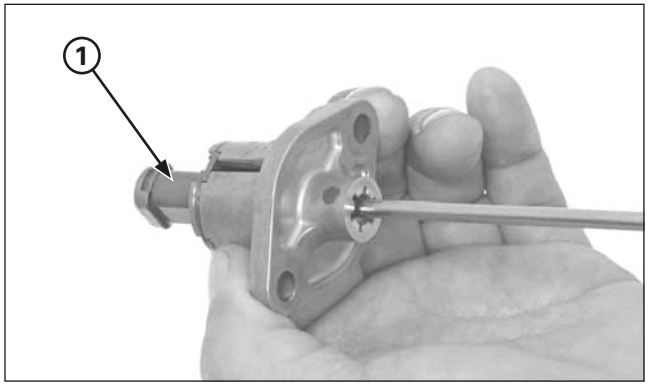

(1) TENSIONER LIFTER

Tensioner lifter
Check the tensioner lifter operation as follows:
– The tensioner shaft should not go into the body when it is pushed.
– When it is turned clockwise with a screwdriver, the tensioner shaft should be pulled into the body. The shaft should spring out of the body as soon as the screwdriver is released.

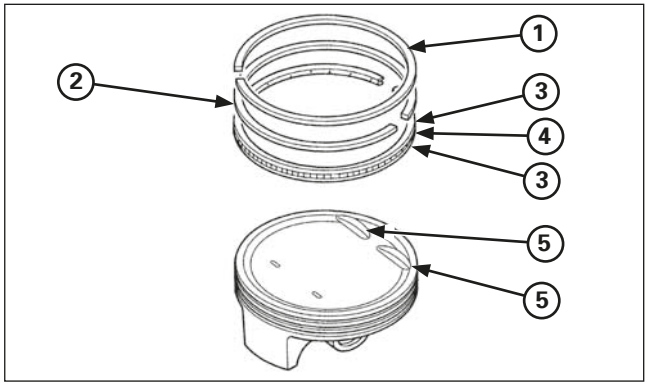

(1) TOP RING (SILVER)
(2) SECOND RING (BLACK)
(3) OIL RINGS
(4) SPACER
(5) INDENTS

Piston Ring Installation

Clean the piston ring grooves thoroughly.
Apply engine oil to the piston rings and piston ring grooves.
Install the piston ring into the grooves with their marking facing up.

- Do not damage the piston ring by spreading the ends too far.
- Be careful not to damage the piston during piston ring installation.
- Do not align the oil ring (side rail) gaps.
- Space the piston ring end 120 degrees apart.

After installation, the rings should rotate freely in the ring grooves.

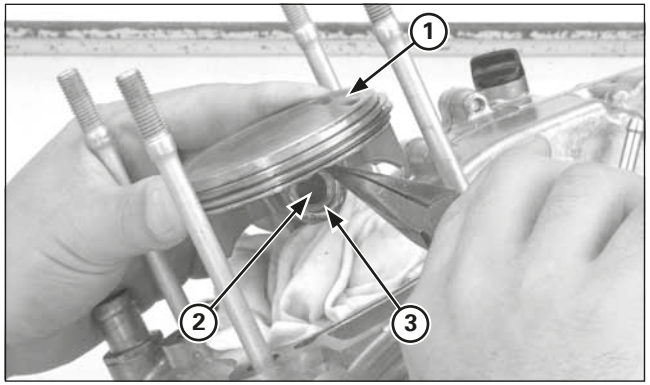

(1) INDENTS
(2) PISTON PIN
(3) NEW PISTON PIN CLIP

Piston Installation

Place a shop towel over the cylinder opening to prevent dust or dirt from entering the engine.
Clean any gasket material from the cylinder mating surfaces of the crankcase.
Apply molybdenum oil solution to the connecting rod small end.

Place a shop towel around the piston skirt and in the crankcase to prevent the piston pin clips from falling into the crankcase.

Apply engine oil to the piston pin outer surface and piston pin bore of the piston.

Install the piston with the arrow facing intake side.
Install the piston pin and new piston pin clips.
Be careful not to drop the piston pin clip into the crankcase.

Always use new piston pin clips. Reinstalling used piston pin clips may lead to serious engine damage.
Do not align the piston pin clip end gap with the piston cut-out.

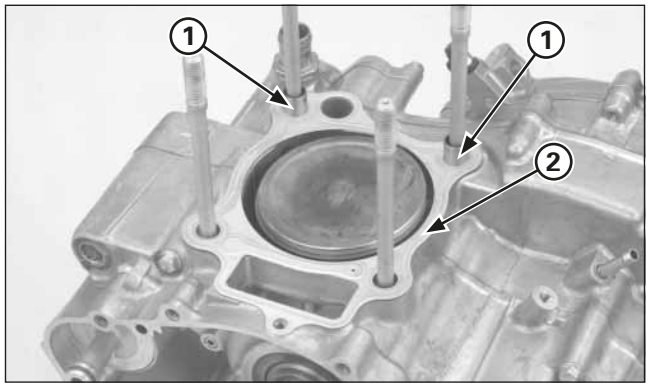

(1) DOWEL PINS
(2) NEW GASKET

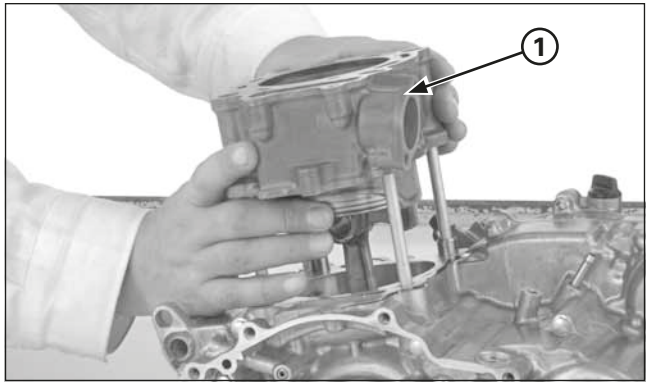

(1) CYLINDER

Cylinder Installation

Install the dowel pins and new gasket.

Coat the cylinder bore, piston and piston rings with clean engine oil and install the cylinder while compressing the piston rings being careful not to damage the rings.

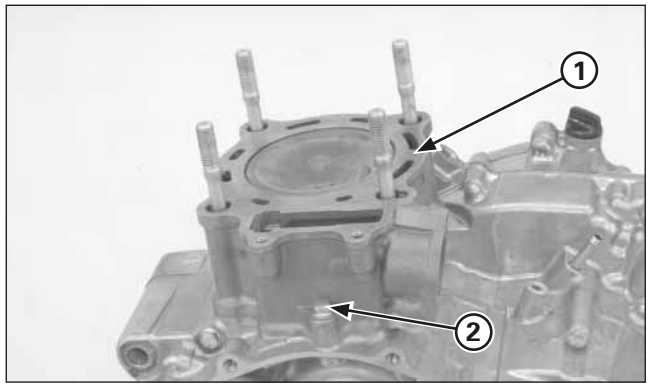

(1) CYLINDER
(2) NEW SEALING BOLT/SEALING WASHER

Apply locking agent to the cylinder mounting sealing bolt threads.
Install the cylinder mounting sealing bolt with a new sealing washer but do not tighten it yet.

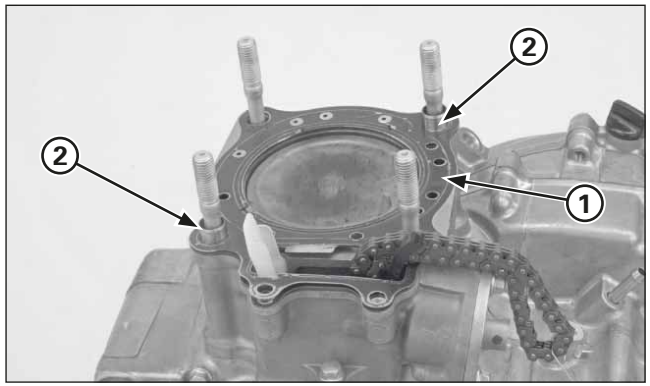

(1) DOWEL PINS
(2) NEW GASKET

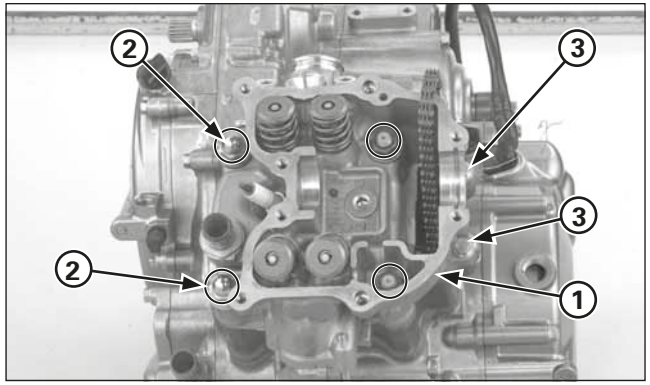

(1) CYLINDER HEAD
(2) WASHERS/NUTS
(3) BOLTS

Cylinder Head Installation

Install the dowel pins and new gasket.
Install the cylinder head onto the cylinder.
Apply oil to the cylinder head mounting nut threads and seating surface, install them with washers.
Install the two cylinder head 6 mm bolts.
Tighten the cylinder head nuts (cap nuts on right side) in a crisscross pattern in 2 – 3 steps to the specified torque.

Torque: 39 N•m (4.0 kgf•m, 29 lbf•ft)

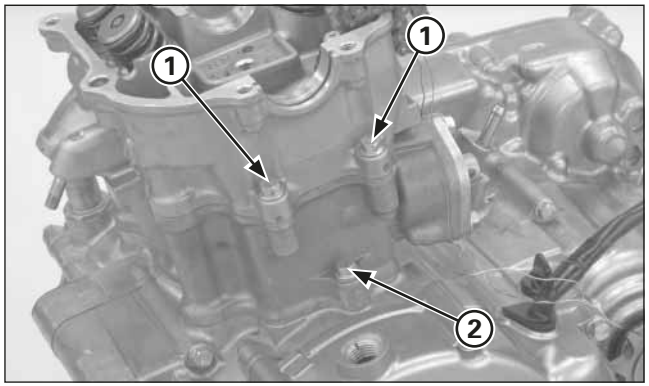

(1) CYLINDER HEAD BOLTS
(2) CYLINDER SEALING BOLT

Tighten the cylinder sealing bolt and cylinder head mounting bolts securely.

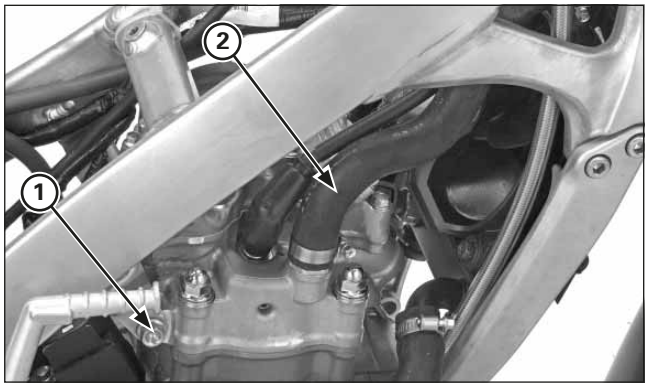

(1) HANGER BOLT
(2) RADIATOR HOSE

Install the upper engine hanger bolt, tighten the nut to the specified torque.

Torque: 24 N•m (2.4 kgf•m, 17 lbf•ft)

Connect the radiator hose to the water joint, tighten the clamp screw securely.

Install the following:
– Camshaft
– Cylinder head cover
– Throttle body/insulator
– Exhaust pipe

Pour recommended coolant mixture and bleed air.

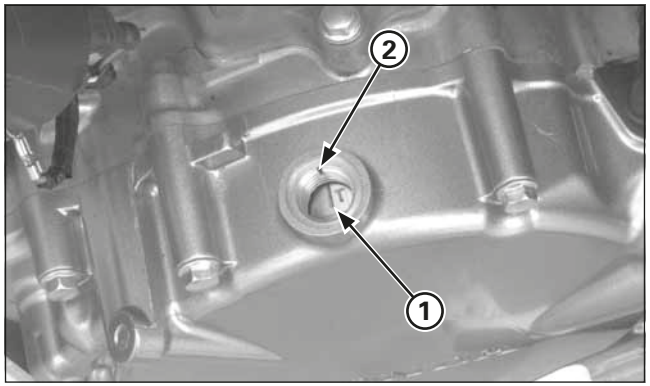

(1) "T" MARK
(2) INDEX MARK

Camshaft/Cylinder Head Cover Installation

Camshaft Installation

Turn the crankshaft by operating the kickstarter, align the "T" mark on the flywheel with the index mark on the left crankcase cover.

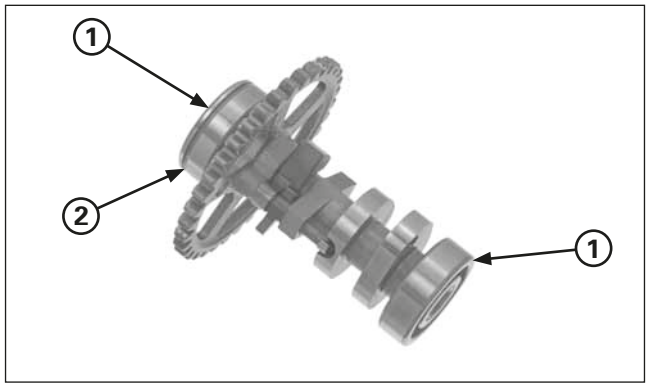

(1) BEARINGS
(2) GROOVE

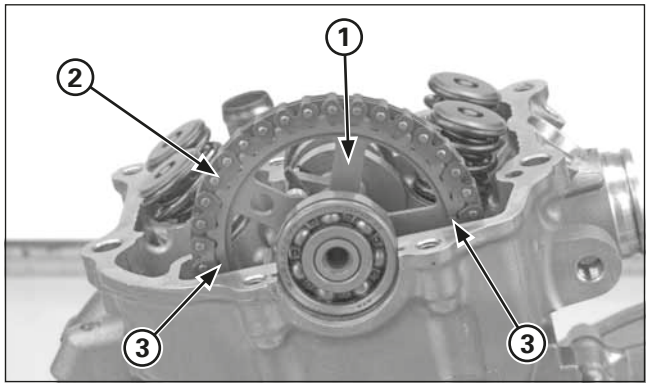

(1) CAM SPROCKET
(2) CAM CHAIN
(3) INDEX MARKS

Apply molybdenum oil solution to the camshaft cam surface.
Install the bearings both ends of the camshaft.
Install the left camshaft bearing with its groove side facing out.

Install the cam chain onto the cam sprocket, then install the camshaft onto the cylinder head while aligning the index marks on the cam sprocket with the upper surface of the cylinder head.

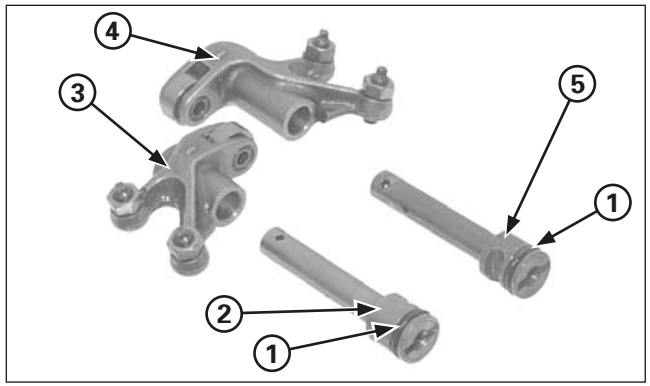

(1) NEW O-RINGS
(2) INTAKE ROCKER ARM SHAFT
(3) INTAKE ROCKER ARM
(4) EXHAUST ROCKER ARM
(5) EXHAUST ROCKER ARM SHAFT

Cylinder Head Cover Assembly

Apply molybdenum oil solution to the rocker arm I.D. and rocker arm shaft sliding surface.
Install new O-ring to each rocker arm shaft groove.

Place the intake rocker and exhaust rocker arm into the cylinder head cover.
The intake rocker arm is identified with groove on the end of the shaft.

Install the intake and exhaust rocker arm shafts with their cut-out facing in and the shaft end oil hole facing up as shown.

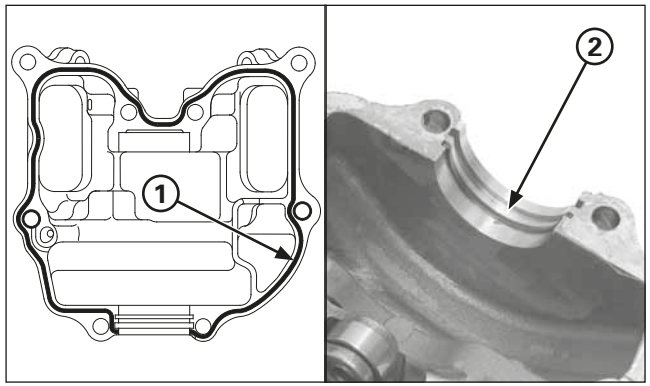

(1) APPLY SEALANT
(2) BEARING RETAINER

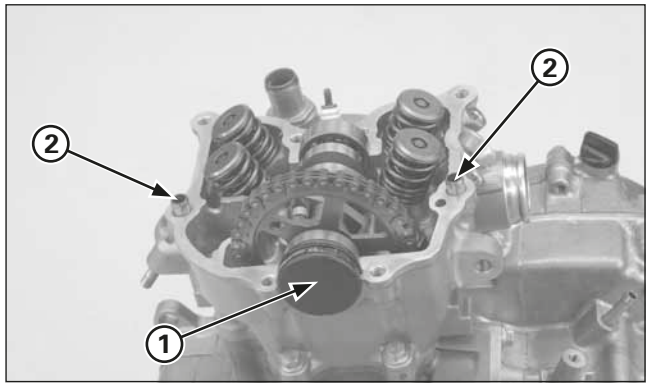

(1) CAMSHAFT END CAP
(2) DOWEL PINS

Cylinder Head Cover Installation

Apply sealant to the mating surface of the cylinder head cover.
Install the camshaft bearing retainer into the cylinder head cover inner groove.

Install the camshaft end cap.

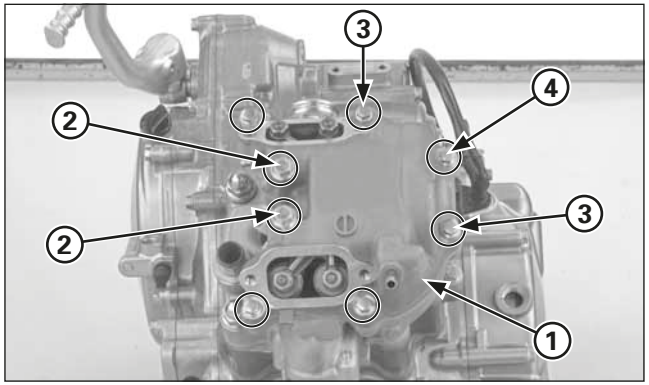

(1) CYLINDER HEAD COVER
(2) NEW SEALING WASHERS/6 MM BOLTS
(3) NEW SEALING WASHERS
(4) SH BOLTS

Install the cylinder head cover.
Install new sealing washers and 6 mm bolts.
Install the two new sealing washers and cylinder head cover SH bolts.

Tighten the cylinder head cover bolts securely.

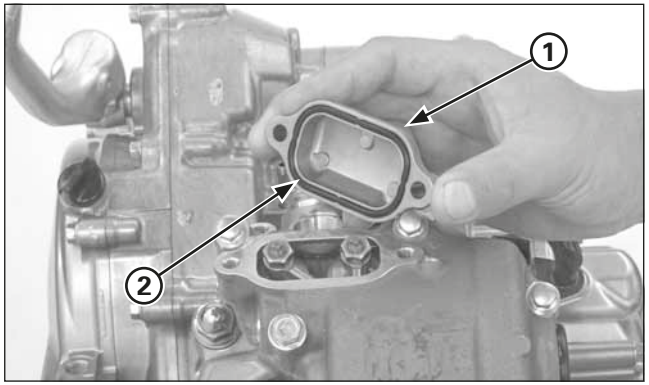

(1) TAPPET ADJUSTING HOLE CAP (2) O-RING

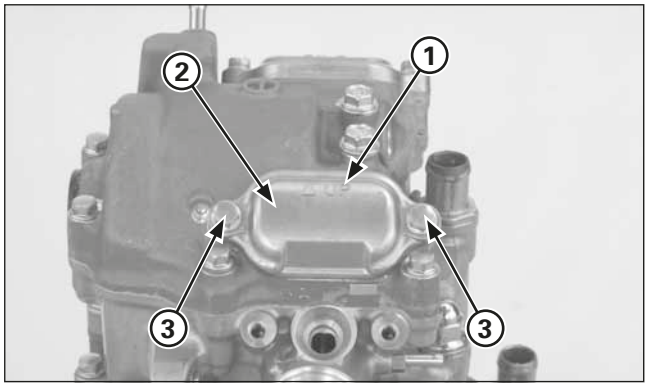

(1) "UP" MARK
(2) TAPPET ADJUSTING HOLE CAP
(3) BOLTS

Check the valve clearance (page 3-4).

Install new O-rings into the tappet adjusting hole cover grooves.
Install the tappet adjusting hole cap with their "UP" marks facing up.

Install and tighten the cover bolts securely.
Connect the crankcase breather hose to the cylinder head cover.

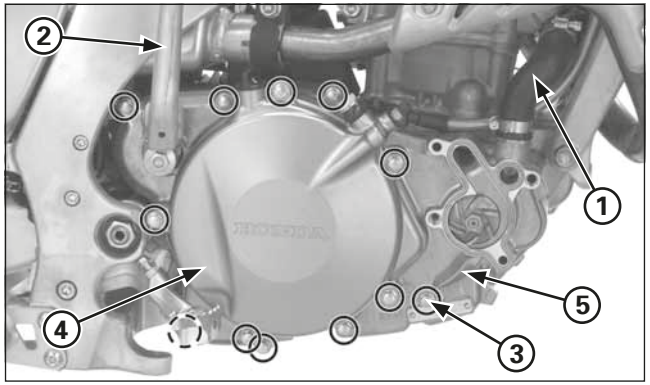

(1) RADIATOR HOSE
(2) KICKSTARTER PEDAL
(3) BOLTS
(4) CLUTCH COVER
(5) RIGHT CRANKCASE COVER

Right Crankcase Cover

Removal

Remove the water pump cover (page 4-15).

Remove the bolt and kickstarter pedal.

Squeeze the clutch lever and secure the lever to prevent the clutch slave piston comes out from the clutch cover.

Disconnect the lower radiator hose.
Remove the bolts, clutch cover, right crankcase cover, gasket and dowel pins.

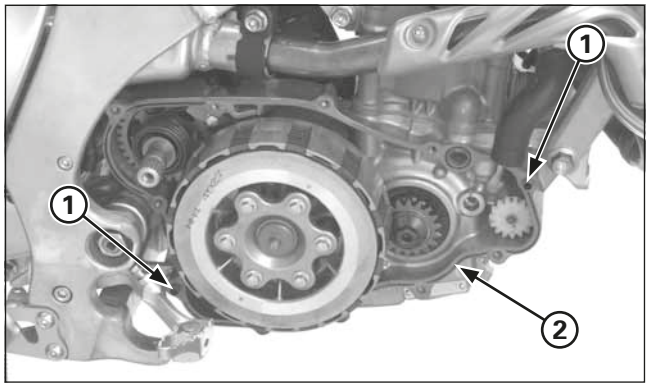

(1) DOWEL PINS
(2) NEW GASKET

Installation

Install two dowel pins and new gasket onto the crankcase.

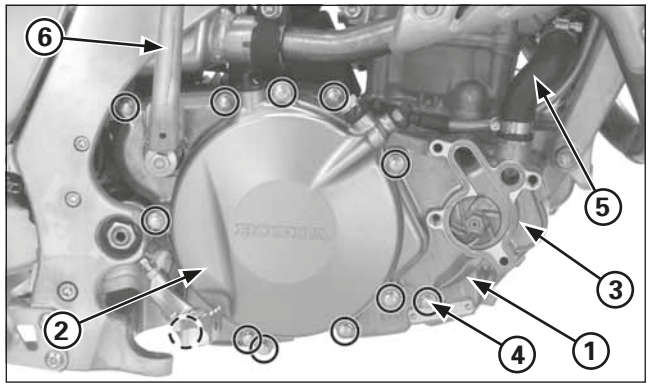

(1) RIGHT CRANKCASE COVER
(2) CLUTCH COVER
(3) WATER PUMP COVER
(4) BOLTS
(5) RADIATOR HOSE
(6) KICKSTARTER PEDAL

Install the right crankcase cover while turning the water pump impeller.
Check the clutch cover O-ring is in good condition, replace if necessary.
Install the clutch cover.

Install the water pump cover (page 4-17).

Tighten the right crankcase cover bolts in a crisscross pattern in 2 – 3 steps.
Install the kickstarter pedal and tighten the bolt to the specified torque.

Torque: 37 N•m (3.8 kgf•m, 27.4 lbf•ft)

Connect the lower radiator hose.
Fill the crankcase with recommended transmission oil (page 3-8).
Fill the coolant and bleed air.

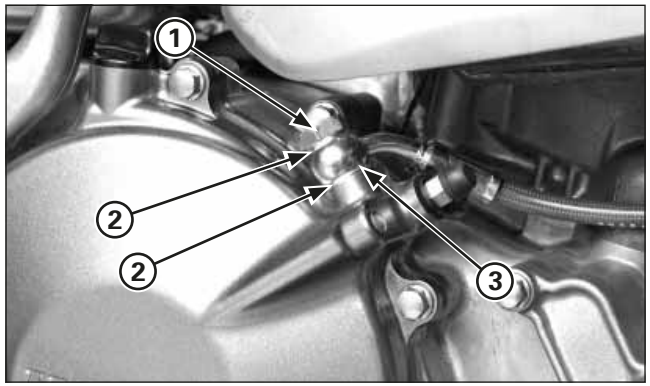

(1) OIL BOLT
(2) SEALING WASHERS
(3) CLUTCH HOSE

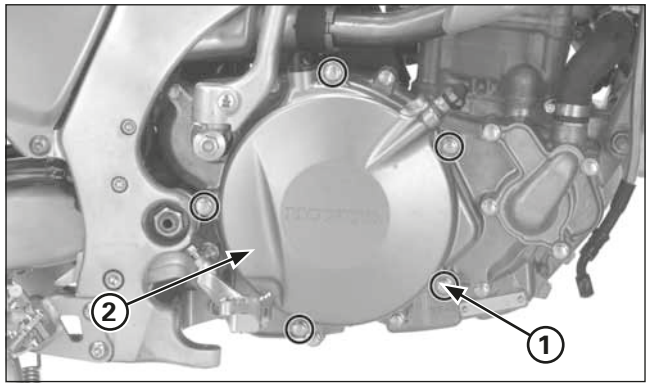

(1) BOLTS
(2) CLUTCH COVER

Clutch Slave Cylinder

Drain the clutch fluid from the clutch hydraulic system.

Remove the oil bolt, sealing washers and clutch hose eyelet.

Remove the bolts, clutch cover and O-ring.
Remove the dowel pins.

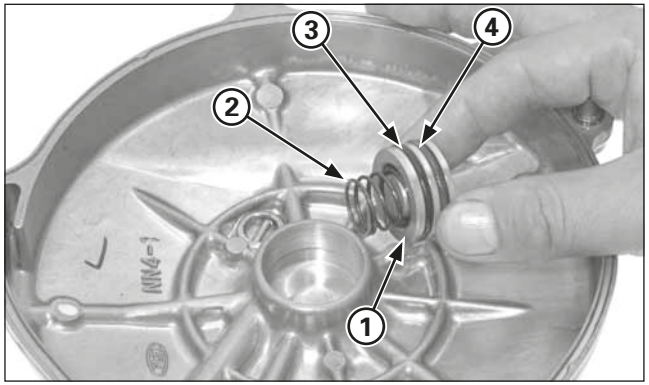

(1) SLAVE CYLINDER PISTON
(2) SPRING
(3) O-RING (BLACK)
(4) O-RING (GREEN)

Apply small squirts of air pressure to the fluid inlet to remove the piston.
Do not use high pressure air or bring the nozzle close to the inlet.

Remove the slave cylinder piston, return spring and O-rings.
Remove the O-rings from the piston.

Check the slave cylinder in the clutch cover for scoring or other damage.
Check the slave cylinder piston for scratches, scoring or other damage.
Check the piston spring for weakness or damage.

Clean slave cylinder O-ring grooves with clean brake fluid.

Apply silicone grease to the O-rings.
Install 23 x 2.1 mm O-ring (Black) into the spring side groove.
Install 21.8 x 2.4 mm O-ring (Green) into the lifter plate side groove.
Do not interchange the O-rings.

Install the return spring and piston into the slave cylinder in the clutch cover.

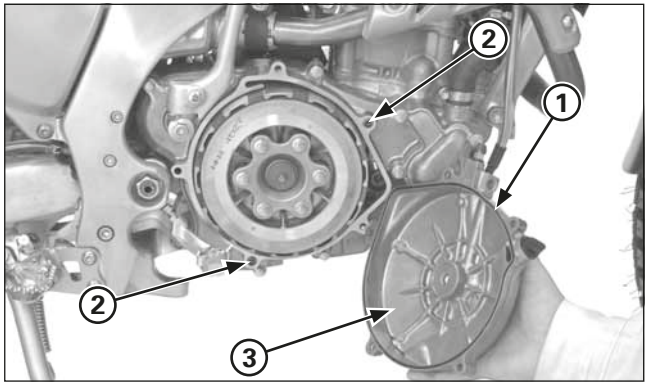

(1) O-RING
(2) DOWEL PINS
(3) CLUTCH COVER

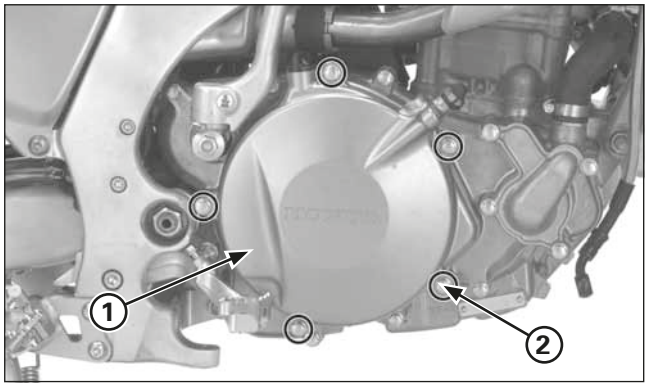

(1) CLUTCH COVER
(2) BOLTS

Install new O-ring into the clutch cover groove.
Install the dowel pins onto the right crankcase cover.
Install the clutch cover onto the right crankcase cover.

Install and tighten the clutch cover bolts.

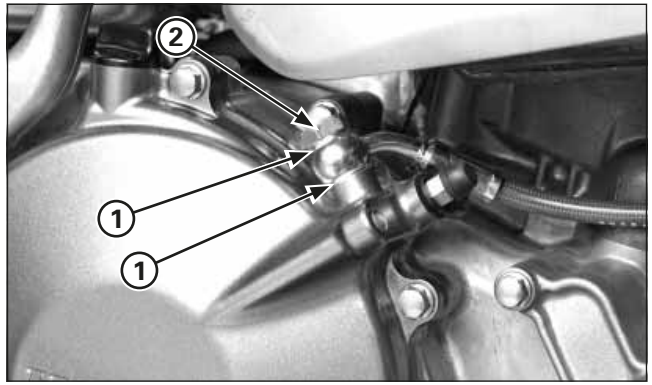

(1) SEALING WASHERS
(2) OIL BOLT

Install the clutch hose eyelet with new sealing washers.
Install and tighten the oil bolt..

Fill the clutch system with recommended brake fluid and bleed air.

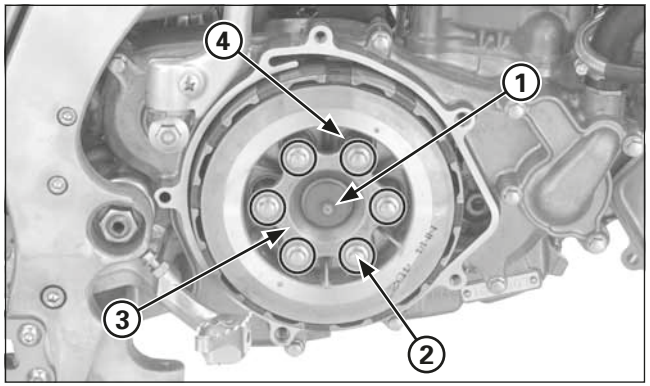

(1) CLUTCH LIFTER PIECE ASSEMBLY
(2) LIFTER PLATE BOLTS
(3) LIFTER PLATE
(4) CLUTCH SPRINGS

Clutch

Removal

Pull the clutch lever and hold it with a suitable clamp.

Remove the bolts and clutch cover without disconnecting the clutch fluid line.

Remove the clutch lifter piece assembly.

Remove the following:
- Clutch lifter plate bolts
- Lifter plate
- Clutch springs
- Springs base washers

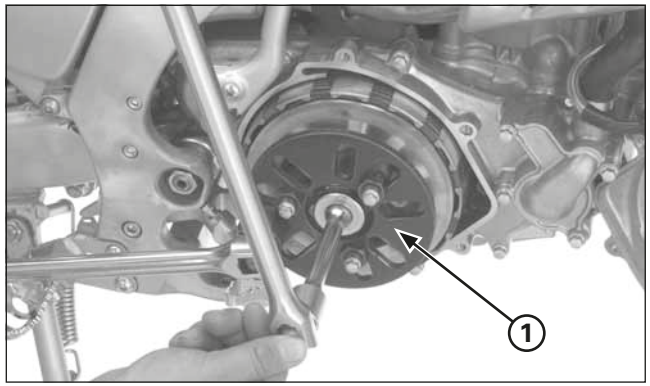

(1) CLUTCH CENTER HOLDER

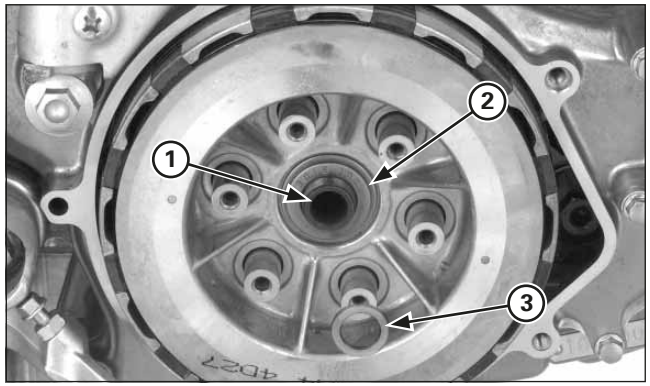

(1) LOCK WASHER
(2) PLAIN WASHER
(3) SPRINGS BASE WASHERS

Hold the clutch assembly with the clutch center holder and remove the clutch center nut.

Tool:

Clutch holder plate	**07HGB-001010B**
Clutch holder collars "A"	**07HGB-001020B**

Remove the lock washer, flat washer, springs and six spring base washers.

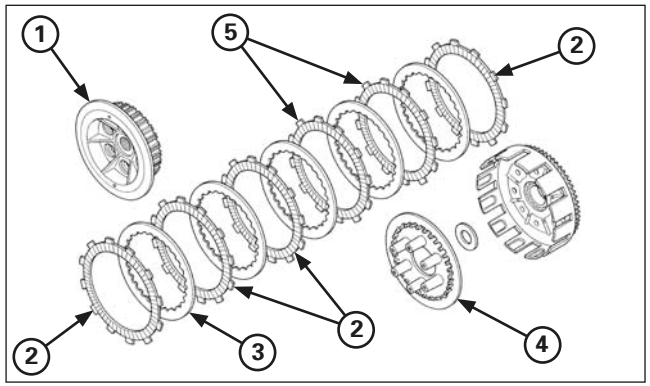

(1) CLUTCH CENTER
(2) CLUTCH DISCS
(3) CLUTCH PLATE
(4) PRESSURE PLATE
(5) PAPER DISCS

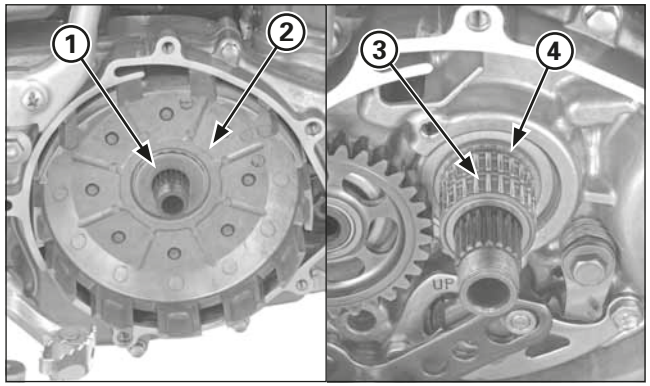

(1) THRUST WASHER
(2) CLUTCH OUTER
(3) NEEDLE BEARING
(4) CLUTCH OUTER GUIDE

Remove the following:
- Clutch center
- Six clutch discs
- Five clutch plates
- Clutch pressure plate

Remove the thrust washer, clutch outer, needle bearing and clutch outer guide.

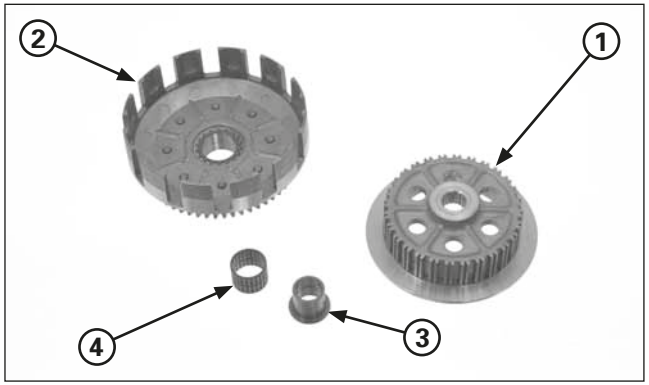

(1) CLUTCH CENTER
(2) CLUTCH OUTER
(3) OUTER GUIDE
(4) NEEDLE BEARING

Inspection

Check the following items (specifications; 2-3).
- Clutch outer for wear, cracks or indentation by the clutch discs.
- Clutch center grooves for damage, crack or indentation by the clutch plates.
- Clutch outer needle bearing for wear or damage.
- Clutch spring free length
- Clutch disc thickness
- Clutch plate warpage
- Clutch outer I.D.
- Clutch outer guide I.D. and O.D.
- Clutch pressure plate for wear or damage
- Mainshaft O.D. at clutch outer guide

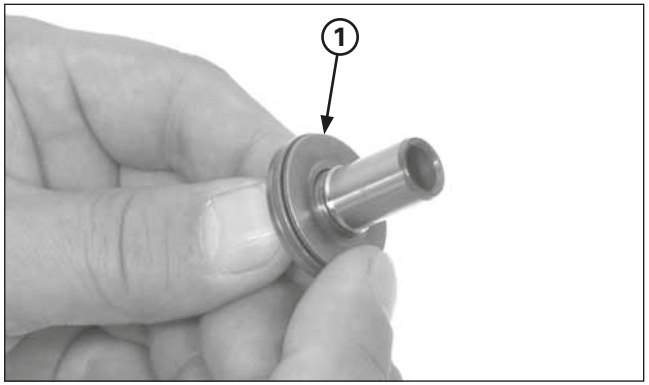

(1) LIFTER PIECE ASSEMBLY

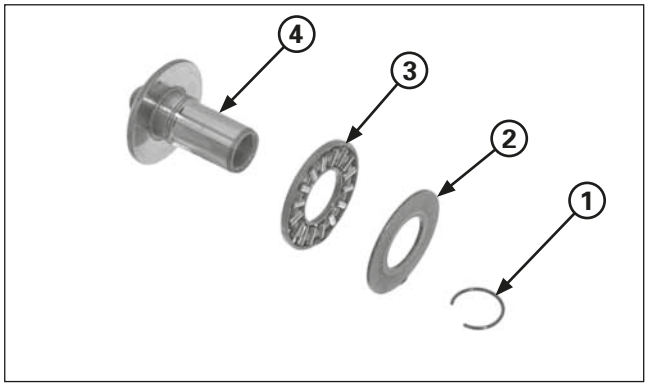

(1) CIRCLIP
(2) THRUST WASHER
(3) THRUST NEEDLE BEARING
(4) LIFTER PIECE

Check the lifter piece needle bearing by turning the thrust washer with your finger.
If the bearing movement is not smooth, disassemble and replace the bearing.

Remove the circlip, thrust washer and thrust needle bearing from the lifter piece.
Assemble the lifter piece in the reverse order of removal.

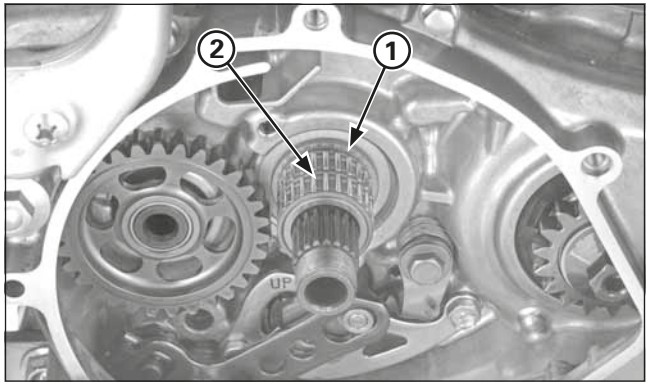

(1) OUTER GUIDE
(2) NEEDLE BEARING

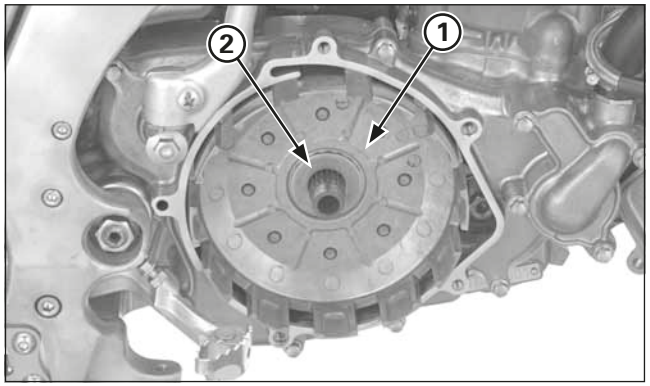

(1) CLUTCH OUTER
(2) THRUST WASHER

Installation

Install the clutch outer guide and needle bearing onto the mainshaft.

Install the clutch outer and thrust washer.

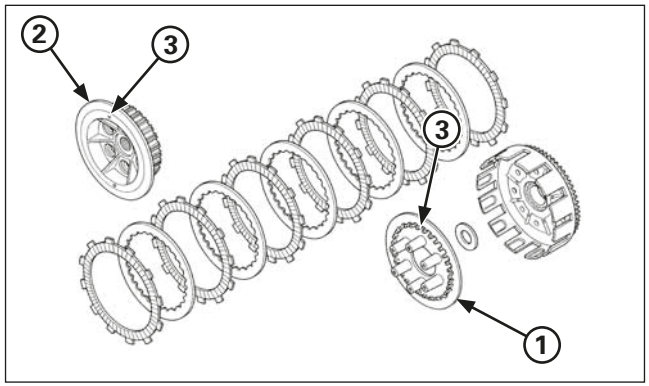

(1) PRESSURE PLATE
(2) CLUTCH CENTER
(3) DOT MARKS

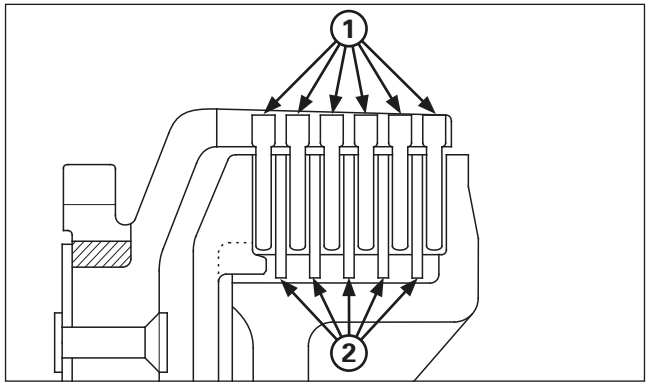

(1) CLUTCH DISCS
(2) CLUTCH PLATE

Coat the clutch plates with clean transmission oil.
Install the clutch discs and plates alternately onto the clutch center starting with the clutch disc
Install the clutch pressure plate onto the clutch center aligning the dot mark on the pressure plate with the dot marks on the clutch center as shown.

Install the clutch center assembly into the clutch outer.

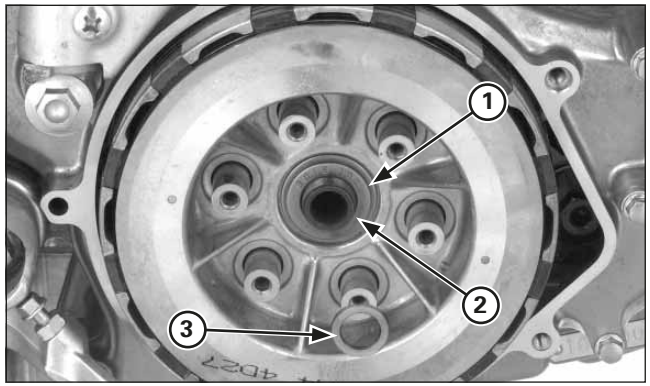

(1) THRUST WASHER
(2) LOCK WASHER ("OUTSIDE" MARK IN FRONT)
(3) SPRING BASE WASHER

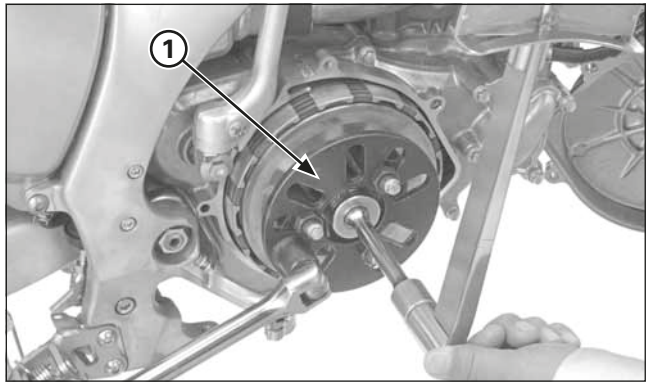

(1) CLUTCH CENTER HOLDER

Install the thrust washer onto the mainshaft.
Install the lock washer with its "OUTSIDE" mark facing out.
Apply oil to the clutch center nut and install it.
Hold the clutch assembly with the clutch center holder and tighten the clutch center nut to the specified torque.

Tool:

Clutch holder plate	**07HGB-001010B**
Clutch holder collars "A"	**07HGB-001020B**

Torque: 69 N•m (7.0 kgf•m, 51 lbf•ft)

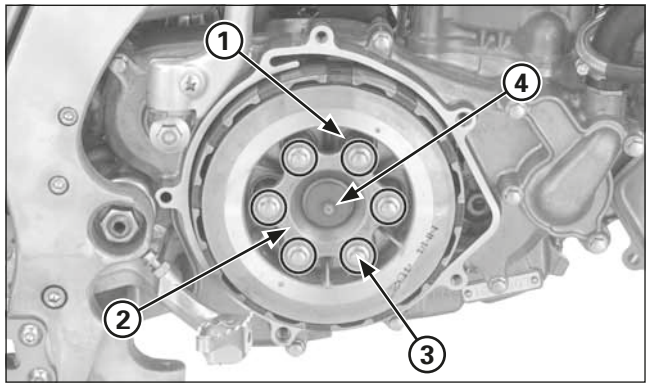

(1) CLUTCH SPRINGS
(2) LIFTER PLATE
(3) BOLTS
(4) LIFTER PIECE ASSEMBLY

Install spring base washers, the clutch springs, lifter plate and spring bolts.
Tighten the spring bolts in a crisscross pattern in several steps, then tighten them to the specified torque.

Torque: 12 N•m (1.2 kgf•m, 9 lbf•ft)

Install the clutch lifter piece assembly.

Install the clutch cover (page 4-44).

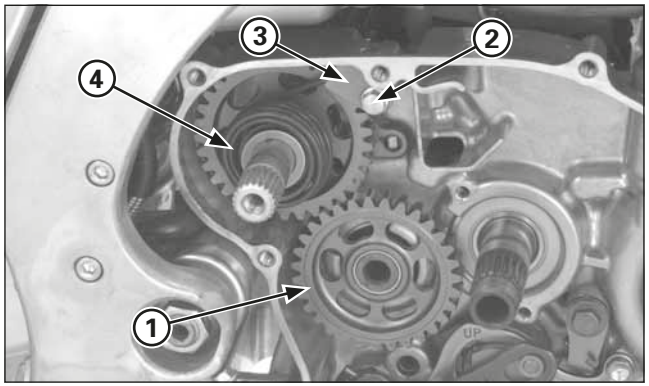

(1) IDLE GEAR/THRUST WASHER
(2) BOLT
(3) STOPPER PLATE
(4) KICKSTARTER ASSEMBLY

Kickstarter

Removal/Disassembly

Remove the clutch (page 4-43)

Remove the kickstarter idle gear and thrust washer.

Remove the bolt and return spring stopper plate.
Unhook the return spring end from the crankcase and remove the kickstarter as an assembly.

Disassemble the kickstarter.

Inspection

Check the following items (specification; page 2-3):
- Return spring and ratchet spring for wear or damage.
- Needle bearing for wear or damage.
- Pinion gear I.D. and spindle O.D.
- Idle gear I.D. and bushing O.D. and I.D.
- Countershaft O.D. at the idle gear bushing.

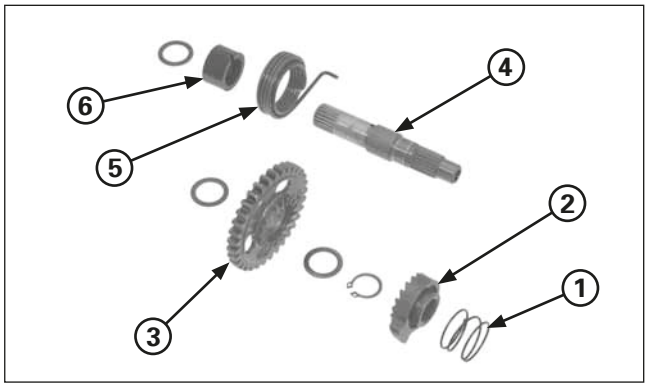

(1) RATCHET SPRING
(2) STARTER RATCHET
(3) PINION GEAR
(4) SPINDLE
(5) RETURN SPRING
(6) COLLAR

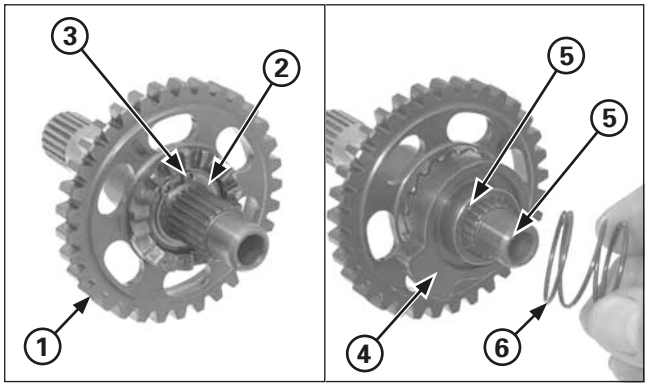

(1) PINION GEAR
(2) THRUST WASHER
(3) SNAP RING
(4) STARTER RATCHET
(5) PUNCH MARKS
(6) RATCHET SPRING

Assembly/Installation

Assemble the kickstarter as shown in the illustration above.

Install the thrust washer, pinion gear, thrust washer and snap ring.
Install the starter ratchet aligning the punch marks on the ratchet and spindle.
Install the ratchet spring.

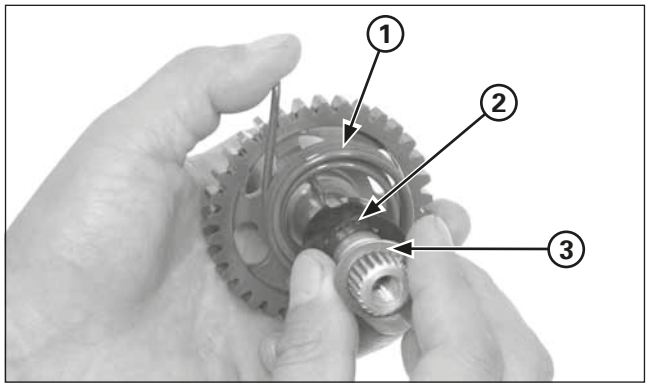

(1) RETURN SPRING
(2) COLLAR
(3) WASHER

Install the return spring with its end into the spindle hole. Install the collar aligning its groove with the return spring end, then install the washer.

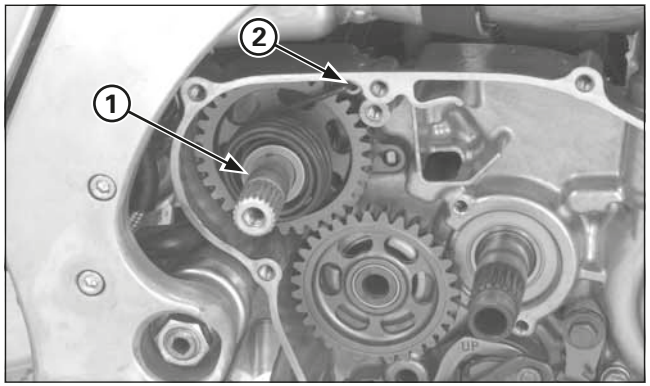

(1) KICKSTARTER ASSEMBLY
(2) SPRING HOOK

Install the kickstarter assembly and hook the starter ratchet with the stopper.
Install the return spring end into the crankcase hole as shown.

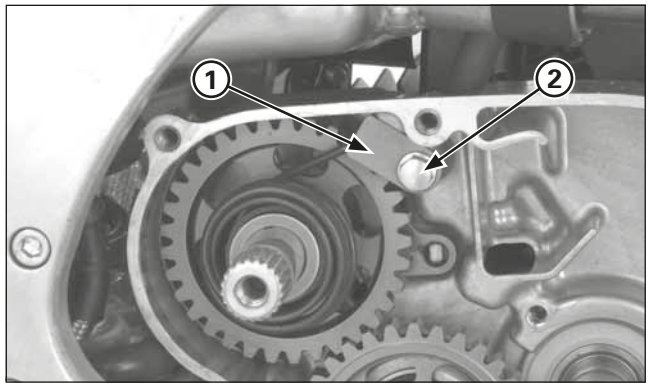

(1) STOPPER PLATE
(2) BOLT

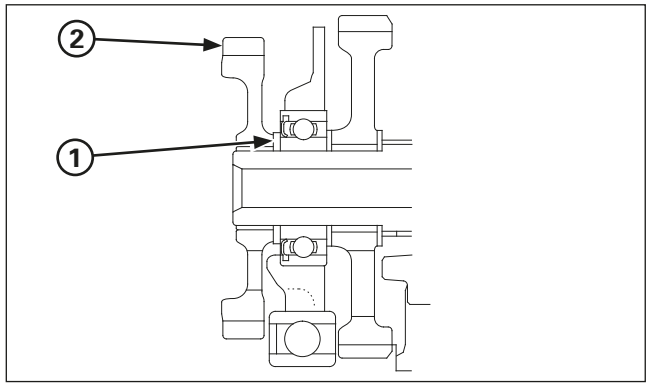

(1) THRUST WASHER
(2) IDLE GEAR

Install the kickstarter return spring stopper plate, and tighten the bolt securely.

Install the thrust washer and idle gear onto the countershaft.
Note the direction of the idle gear as shown in the illustration.

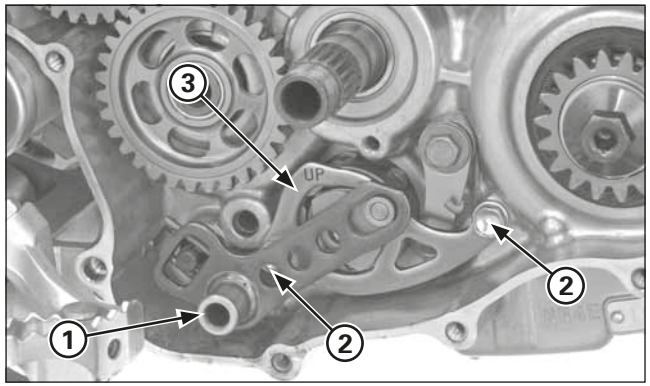

(1) GEARSHIFT SPINDLE
(2) BOLTS
(3) GUIDE PLATE

Gearshift Linkage

Removal

Remove the gearshift pedal.
Pull out the gearshift spindle from the crankcase.

Remove the guide plate bolts and guide plate as an assembly.

Remove the center bolt and drum center.
Remove the bolts and stopper arm, return spring and washer.

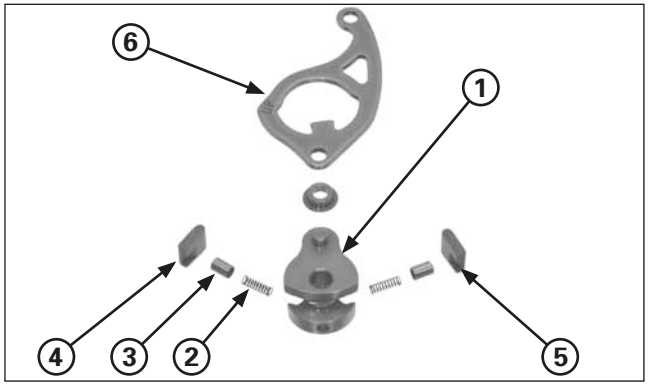

(1) DRUM SHIFTER
(2) SPRING
(3) PLUNGER
(4) RATCHET PAWL A
(5) RATCHET PAWL B
(6) GUIDE PLATE

Inspection

Inspect each part for wear or damage and replace if necessary.

Installation

Apply transmission oil to the ratchet pawls, springs and plungers.
Assemble the drum shifter, springs, plungers and ratchet pawls in the guide plate as shown.

NOTICE

Note the direction of the ratchet pawl A and B.

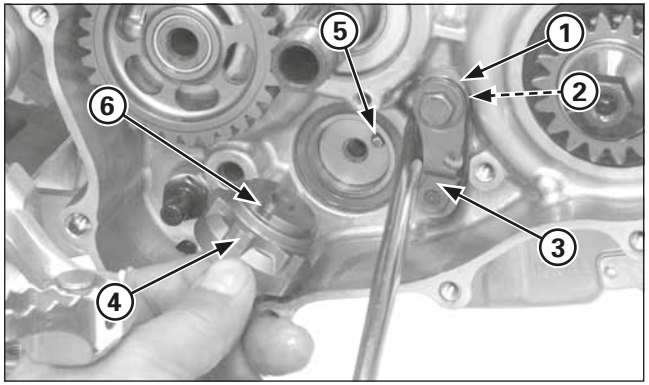

(1) RETURN SPRING
(2) WASHER
(3) STOPPER ARM
(4) DRUM CENTER
(5) DOWEL PIN
(6) CUT-OUT

Install the return spring, plain washer and stopper arm and tighten the stopper arm bolt to the specified torque.

Torque: 12 N•m (1.2 kgf•m, 9 lbf•ft)

Install the dowel pin into the shift drum.
Install the drum center by aligning the cut-out with the dowel pin on the shift drum while holding the stopper arm with the screwdriver as shown.

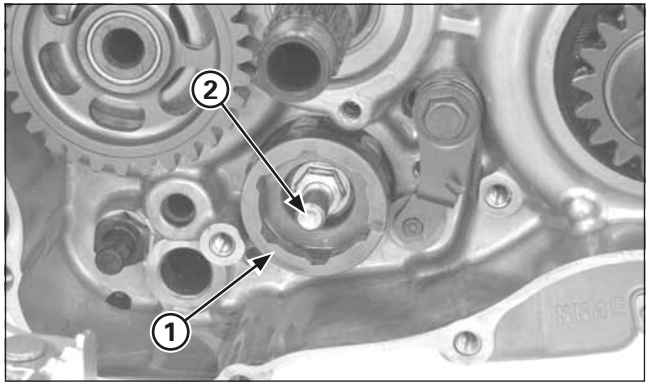

(1) SHIFT DRUM CENTER
(2) CENTER PIN

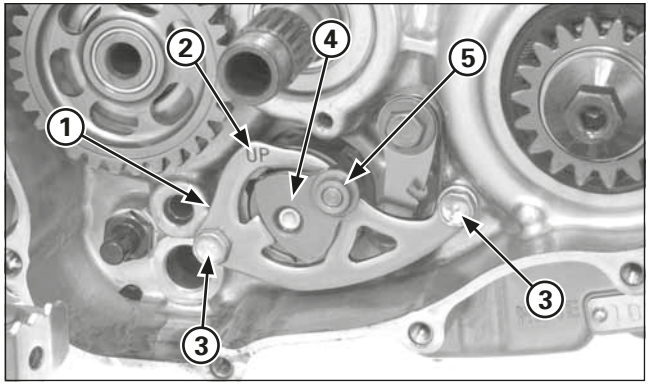

(1) GUIDE PLATE
(2) "UP" MARK
(3) BOLTS
(4) DRUM SHIFTER
(5) SHIFTER COLLAR

Apply a locking agent to the center bolt threads and install and tighten the drum center bolt to the specified torque.

Torque: 22 N•m (2.2 kgf•m, 16 lbf•ft)

Set the drum center in a position other than neutral.
Install the drum shifter with the guide plate while holding onto the ratchet pawls.
Install the guide plate bolts and tighten them.
Install the shifter collar on the drum shifter.

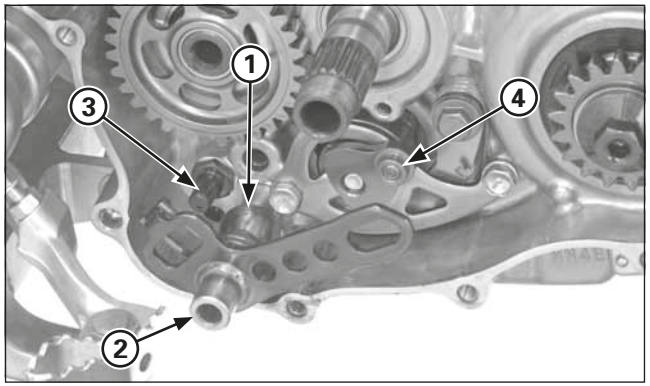

(1) WASHER
(2) GEARSHIFT SPINDLE
(3) RETURN SPRING PIN
(4) SHIFTER COLLAR

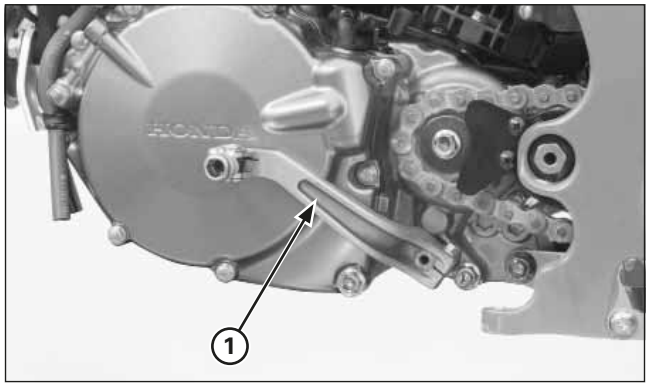

(1) GEARSHIFT PEDAL

Install the washer and gearshift spindle aligning the return spring ends with the shift fork shaft on the crankcase and guide plate hole with the shifter collar.

Install the gearshift pedal and check the operation.

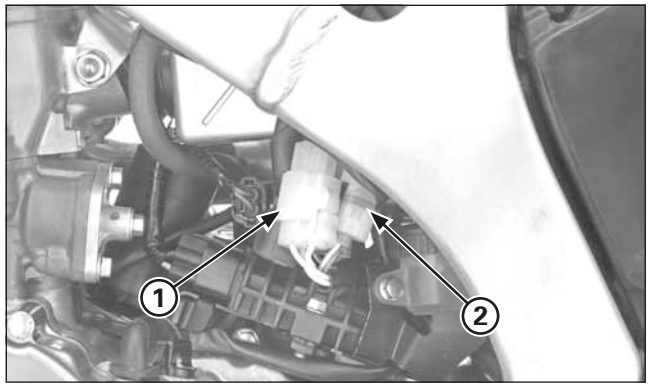

(1) 3P (NATURAL) CONNECTOR
(2) 2P (NATURAL) CONNECTOR

Left Crankcase Cover

Removal

Remove the skid plate and drain engine oil.

Disconnect the alternator 3P (Natural) connector and ignition pulse generator 2P (Natural) connectors.

Remove the gearshift pedal.

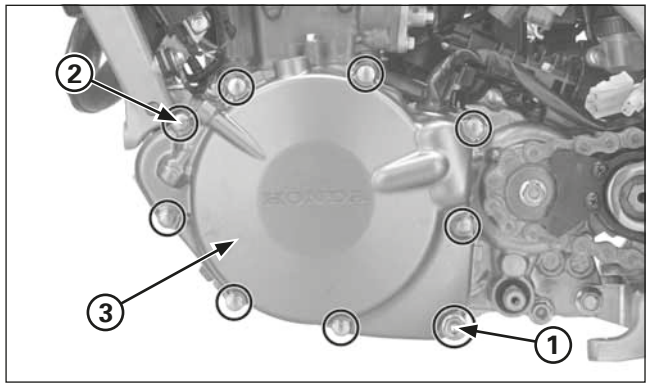

(1) DRAIN BOLT/SEALING WASHER
(2) BOLTS
(3) LEFT CRANKCASE COVER

Remove the engine oil drain bolt and sealing washer, drain the engine oil.
Remove the bolts and left crankcase cover.

NOTICE

The left crankcase cover (stator) is magnetically attached to the flywheel, be careful during removal.

Remove the left crankcase cover, gasket and dowel pins.

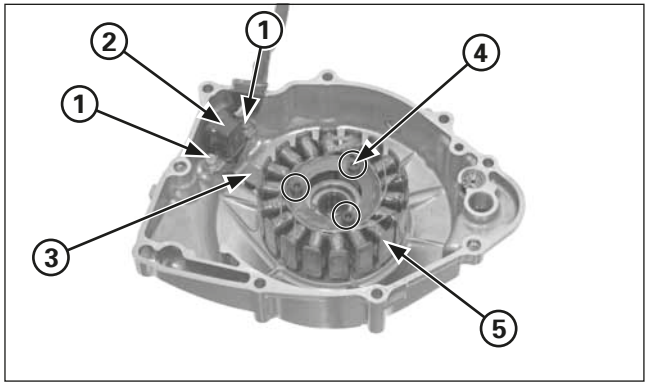

(1) BOLTS (2) IGNITION PULSE GENERATOR
(3) WIRE GUIDE (4) SOCKET BOLTS
(5) STATOR

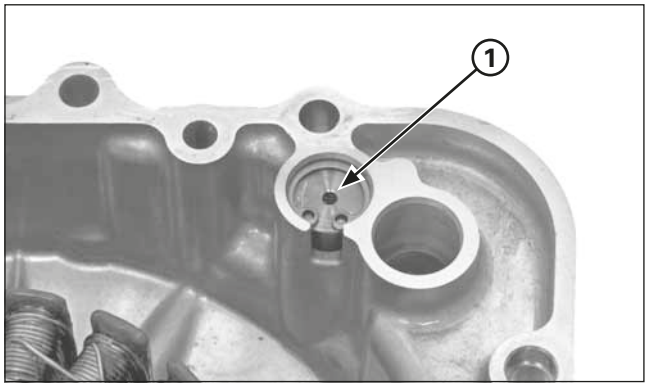

(1) OIL PRESSURE RELIEF VALVE

Disassembly/Assembly

Remove the ignition pulse generator mounting flange bolts and alternator wire clamp.
Remove the stator mounting socket bolts.
Remove the stator/ignition pulse generator from the left crankcase cover.

Remove the oil pressure relief valve (page 4-1).

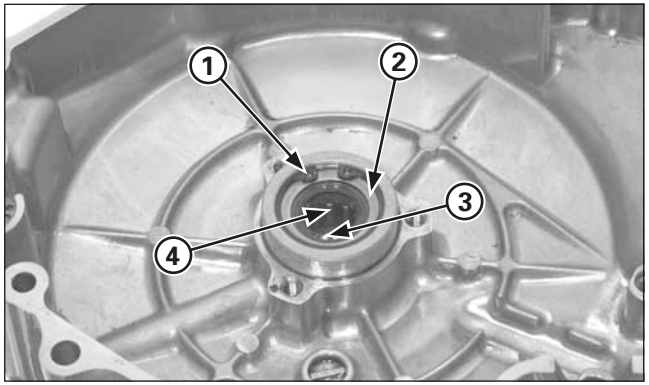

(1) SNAP RING (2) WASHER
(3) OIL SEAL (4) NEEDLE BEARING

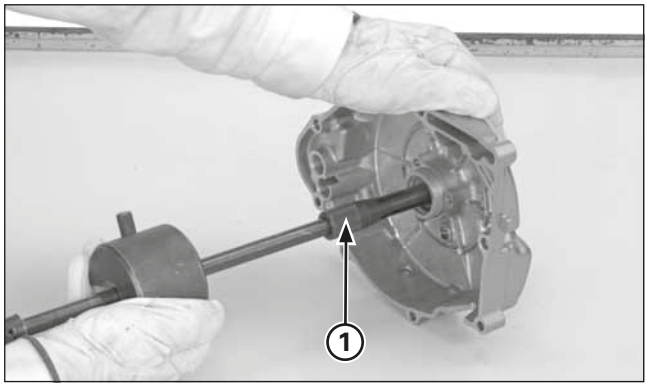

(1) BEARING REMOVER

Check the crankshaft oil seal and needle bearing for wear or damage, replace them if necessary.
Remove the snap ring and washer, then remove the oil seal.

Remove the needle bearing using the special tools.

Tools:

Bearing remover, 15 mm	**07936–KC10500**
Remover weight	**07936–371020A**

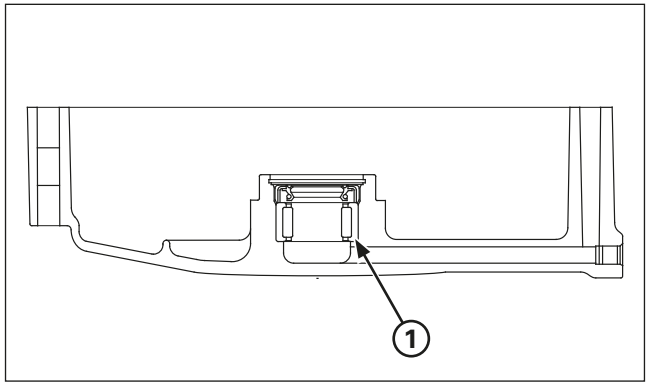

(1) NEEDLE BEARING

Press new needle bearing into the left crankcase cover using the special tools.

Tools:

Driver	**07749–0010000**
Attachment, 22 x 24 mm	**07746–0010800**
Pilot, 15 mm	**07746–0040300**

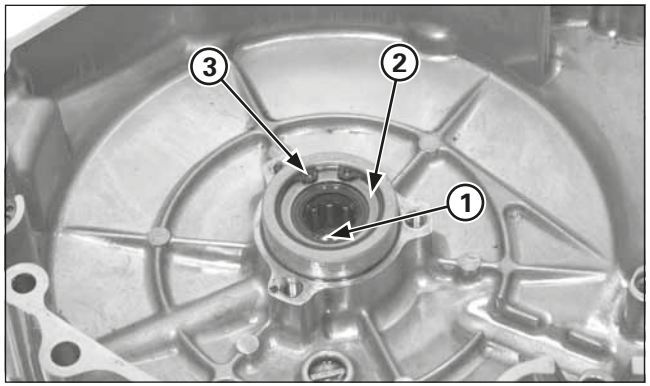

(1) OIL SEAL
(2) WASHER
(3) SNAP RING

Apply grease to the new oil seal lip and install it into the left crankcase cover.
Install the washer and snap ring.

Install the oil pressure relief valve (page 4-1).

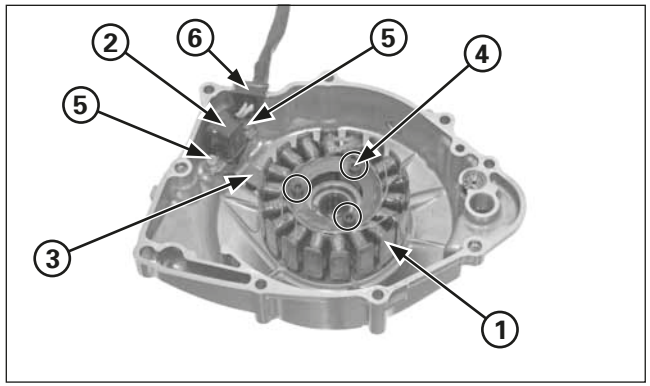

(1) STATOR
(2) IGNITION PULSE GENERATOR
(3) WIRE CLAMP
(4) SOCKET BOLTS
(5) BOLTS
(6) GROMMET

Install the stator and ignition pulse generator assembly into the left crankcase cover.
Apply locking agent to the stator and ignition pulse generator mounting bolt threads.
Install the alternator wire clamp.

Install the stator and ignition pulse generator mounting bolts.
Tighten the stator mounting bolts to the specified torque.

Torque: 5.4 N•m (0.55 kgf•m, 4.0 lbf•ft)

Tighten the ignition pulse generator mounting bolts to the specified torque.

Torque: 5.4 N•m (0.55 kgf•m, 4.0 lbf•ft)

Apply sealant to the stator/ignition pulse generator wire grommet and install it into the left crankcase cover groove.

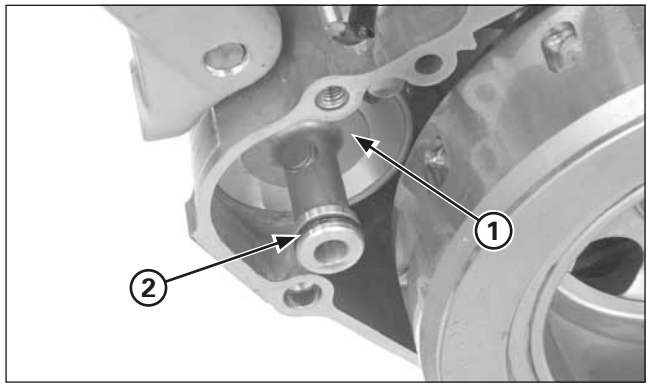

(1) OIL FILTER COVER
(2) O-RING

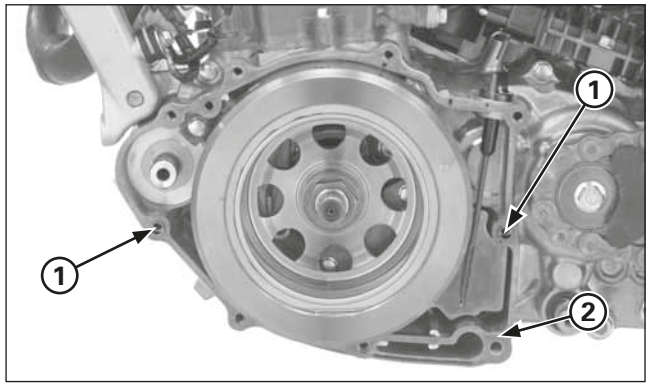

(1) DOWEL PINS
(2) NEW GASKET

Installation

Check the oil filter cover O-ring is in groove condition, replace if necessary.

Install dowel pins and new gasket.

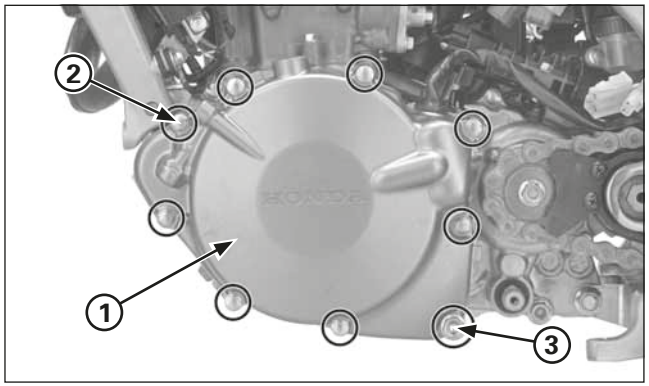

(1) LEFT CRANKCASE COVER
(2) BOLTS
(3) NEW SEALING WASHER/DRAIN BOLT

Install the left crankcase cover being careful not to damage the oil filter cover O-ring.

NOTICE

The left crankcase cover (stator) is magnetically attached to the flywheel, be careful during installation.

Install and tighten the bolts in a crisscross pattern in 2 or 3 steps.
Install the new sealing washer and engine oil drain bolt, tighten the bolt to the specified torque.

Torque: 22 N•m (2.2 kgf•m, 16 lbf•ft)

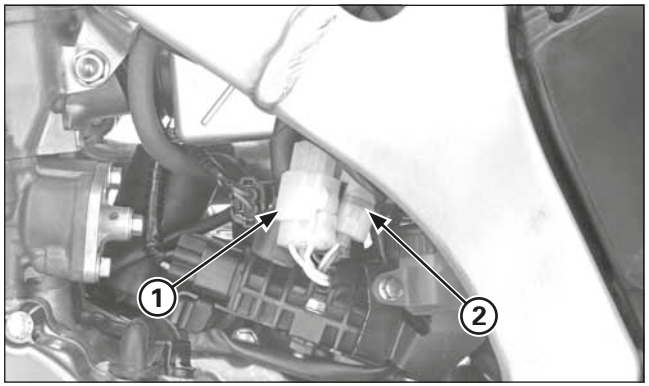

(1) 3P (NATURAL) CONNECTOR
(2) 2P (NATURAL) CONNECTOR

Install the gearshift pedal.

Connect the alternator 3P (Natural) connector and ignition pulse generator 2P (Natural) connectors.

Pour recommended engine oil up to proper level.

Install the slid plate.

Flywheel

Removal

Remove the left crankcase cover (page 4-49).

Hold the flywheel with flywheel holder, loosen the flywheel nut.

Tool:
Flywheel holder 07AMB-NN4A100

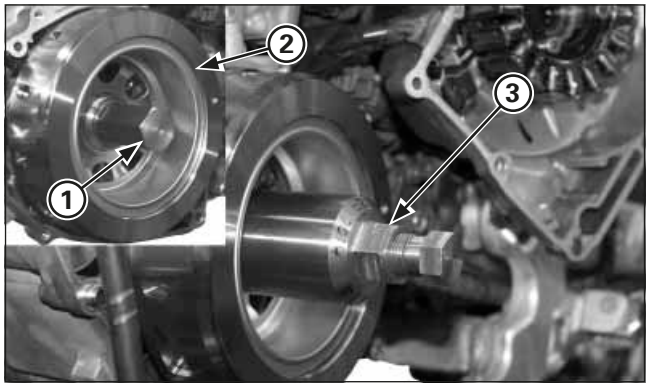

(1) THREAD PROTECTOR
(2) FLYWHEEL
(3) FLYWHEEL PULLER

Install the thread protector, which is included with the flywheel puller, onto the crankshaft.
Install the flywheel puller and remove the flywheel.

Tool:
Flywheel puller w/ thread protector, 36 x 1.5 mm L/H 07AMC-NN4A100

Replacement part:
Thread protector, 18 x 1.5 mm ONLY 07AMC-NN4A110

NOTICE

If required, remove the woodruff key.

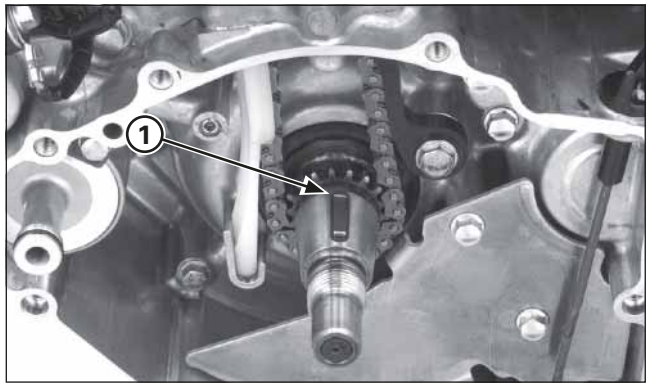

(1) WOODRUFF KEY

INSTALLATION

Install the woodruff key into the crankshaft groove.

Install the flywheel onto the crankshaft.
Apply oil to the flywheel nut threads and seating surface.
Install the washer and flywheel nut.

Hold the flywheel with flywheel holder, tighten the flywheel nut to the specified torque.

Tool:
Flywheel holder 07AMB-NN4A100

Torque: 167 N•m (17.0 kgf•m, 123 lbf•ft)

Install the left crankcase cover (page 4-50).

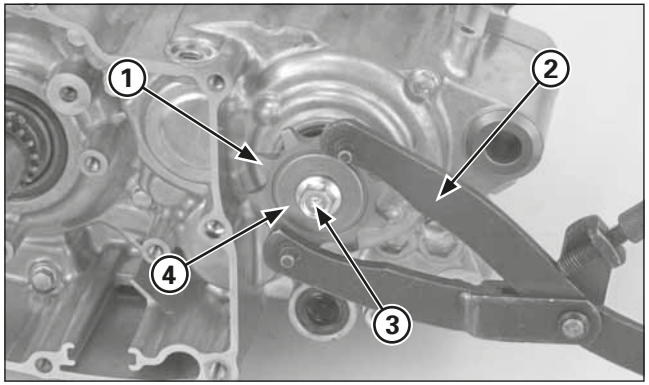

(1) DRIVE SPROCKET
(2) UNIVERSAL HOLDER
(3) BOLT
(4) SPRING WASHER

Crankcase Separation/Disassembly

Remove the engine from the frame.

Remove the following:
– Cylinder head, cylinder, piston
– Clutch
– Kickstarter
– Gearshift linkage
– Flywheel and stator
– Oil filter
– Crankcase breather hose

Hold the drive sprocket with the universal holder and remove the drive sprocket bolt, spring washer and drive sprocket.

Tool:
Universal holder 07725-0030000

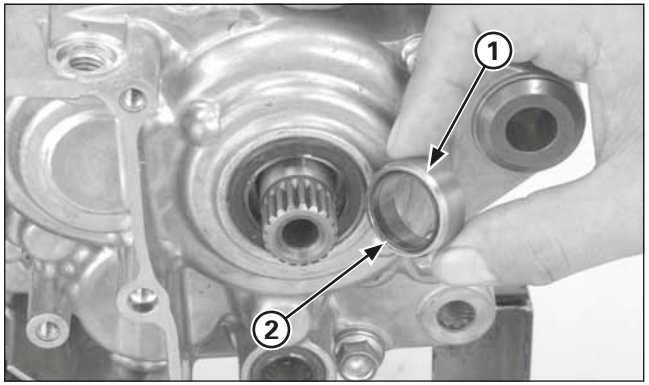

(1) COUNTERSHAFT COLLAR
(2) O-RING

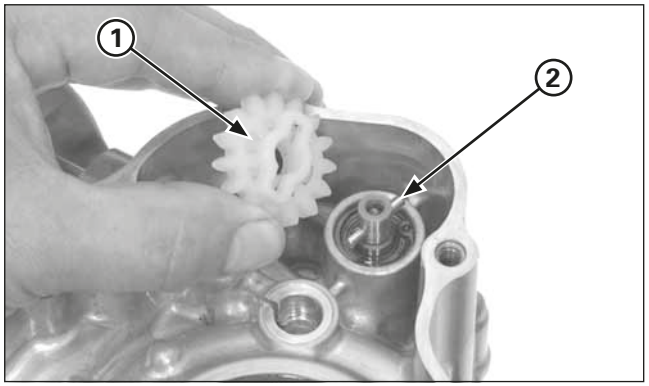

(1) OIL PUMP DRIVEN GEAR
(2) DRIVE PIN

Remove the countershaft collar and O-ring.

Remove the oil pump driven gear and drive pin.

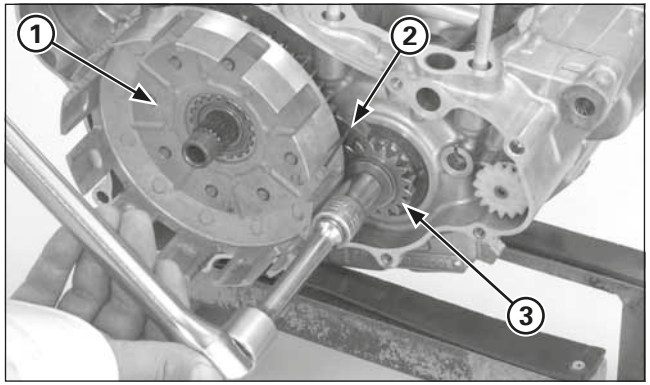

(1) CLUTCH OUTER
(2) GEAR HOLDER
(3) PRIMARY DRIVE GEAR

Temporarily install the clutch outer guide, needle bearing and clutch outer onto the mainshaft and attach the gear holder between the primary drive and driven gears.
Remove the primary drive gear bolt.

Tool:
Gear holder 07724-001A100

Remove the washer, primary drive gear and drive gear collar.

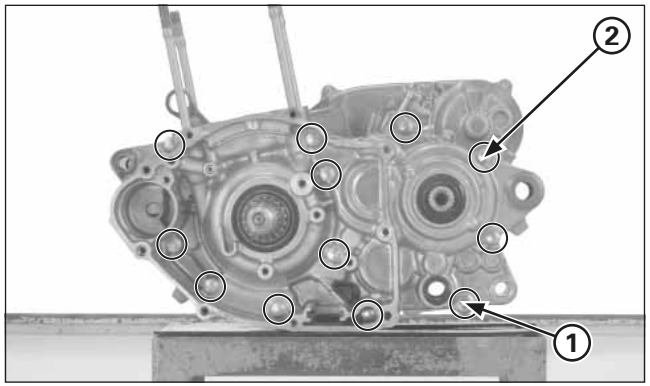

(1) TRANSMISSION OIL DRAIN BOLT
(2) CRANKCASE BOLTS

Remove the transmission oil drain bolt and sealing washer.
Loosen the crankcase bolts in a crisscross pattern in 2 or 3 steps.
Remove the crankcase bolts.

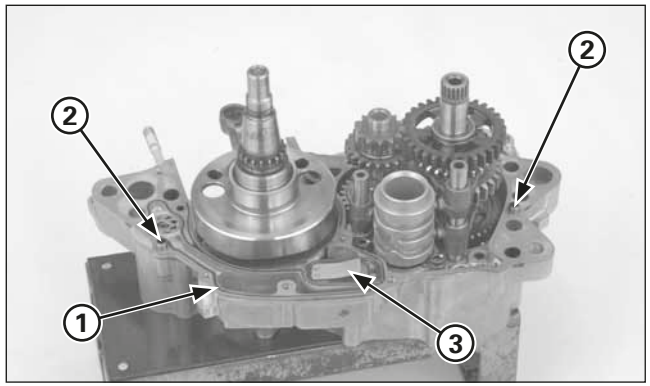

(1) GASKET
(2) DOWEL PINS
(3) ONE-WAY REED VALVE

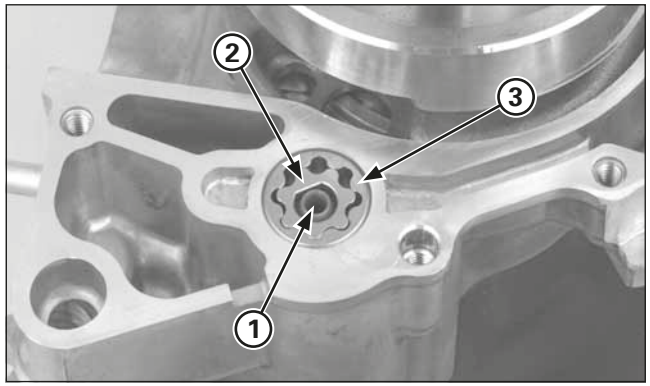

(1) OIL PUMP SHAFT
(2) INNER ROTOR
(3) OUTER ROTOR

Place the right crankcase facing down and remove the left crankcase from the right crankcase.
Remove the gasket and dowel pins.
Remove the one-way reed valve.

Remove the oil pump shaft, oil pump inner and outer rotors.

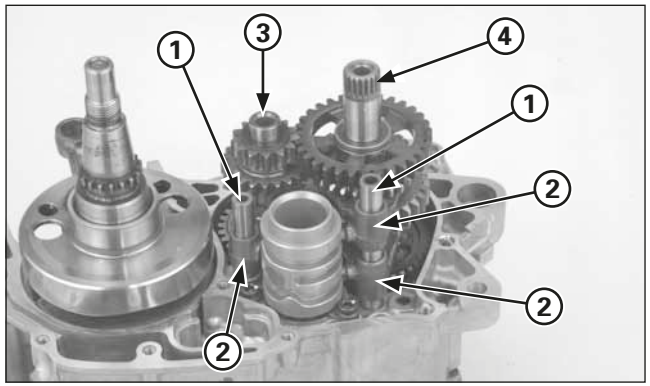

(1) SHIFT FORK SHAFTS
(2) SHIFT FORKS
(3) MAINSHAFT
(4) COUNTERSHAFT

Remove the following:
- Crankshaft
- Shift fork shafts, shift forks and shift drum
- Mainshaft and countershaft assembly

Disassemble the mainshaft and countershaft.

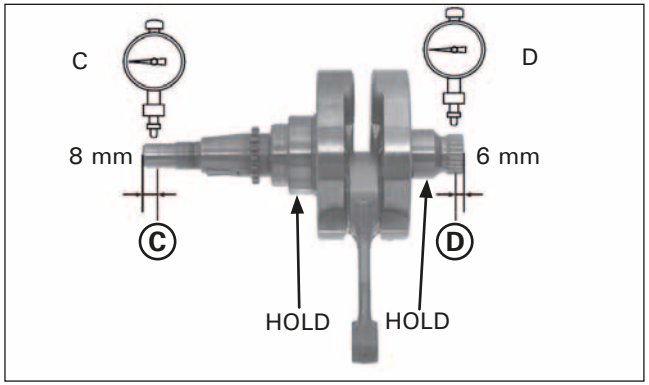

Crankshaft/Transmission Inspection

Measure the crankshaft runout.
Support the crankshaft with V-blocks or a stand and then measure the runout at the points "C" and "D".

Service limit: **C:** **0.05 mm (0.002 in)**
D: **0.03 mm (0.001 in)**

Measure the connecting rod big end side clearance and big end axial/radial play (specification; Page 2-3).

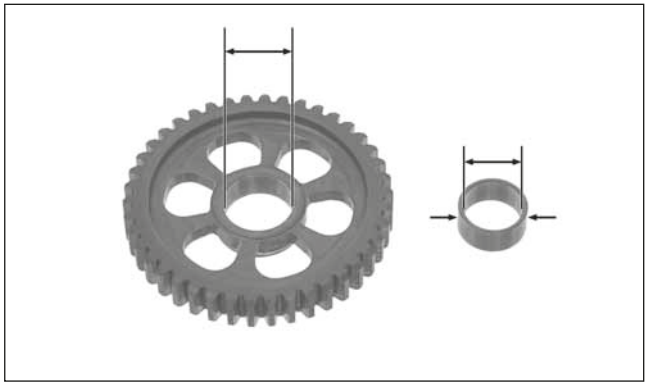

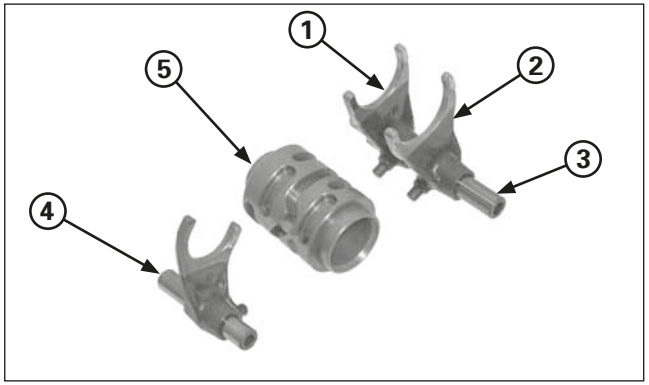

(1) RIGHT SHIFT FORK
(2) LEFT SHIFT FORK
(3) RIGHT/LEFT SHIFT FORK SHAFT
(4) CENTER SHIFT FORK/SHAFT
(5) SHIFT DRUM

Inspect each part for wear or damage.
Check the following items (specifications; page 2-3).
- Spinning gear I.D.
- Bushing I.D. and O.D.
- Mainshaft and countershaft O.D.
- Shift fork I.D. and claw thickness
- Shift fork shaft O.D.
- Shift drum O.D.

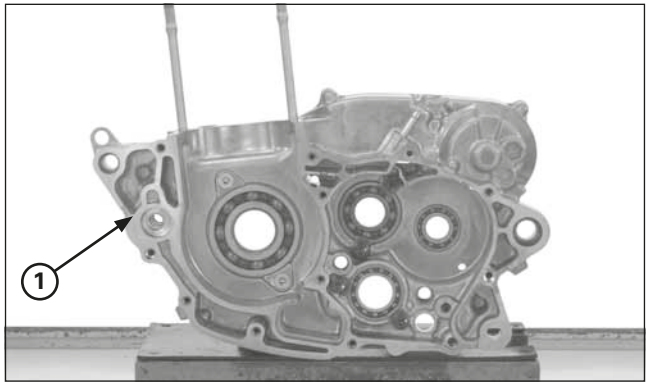

(1) RIGHT CRANKCASE

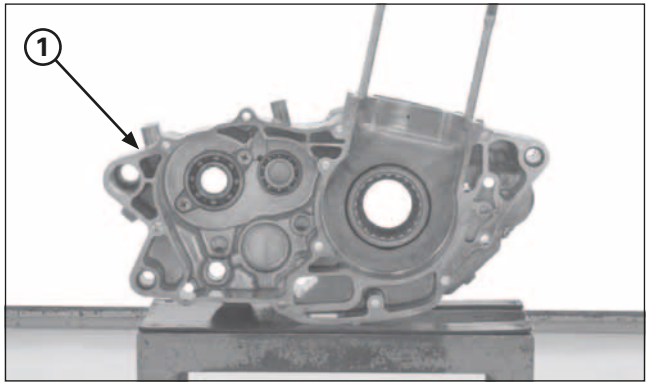

(1) LEFT CRANKCASE

Crankcase Bearing Replacement

Remove the oil seals and bearing set plates.
Drive out the bearing using the special tools listed on page 2-7.

Install the new bearing as shown in the illustration using the special tools listed on page 2-7.

Crankcase Bearings/Oil Seals Location

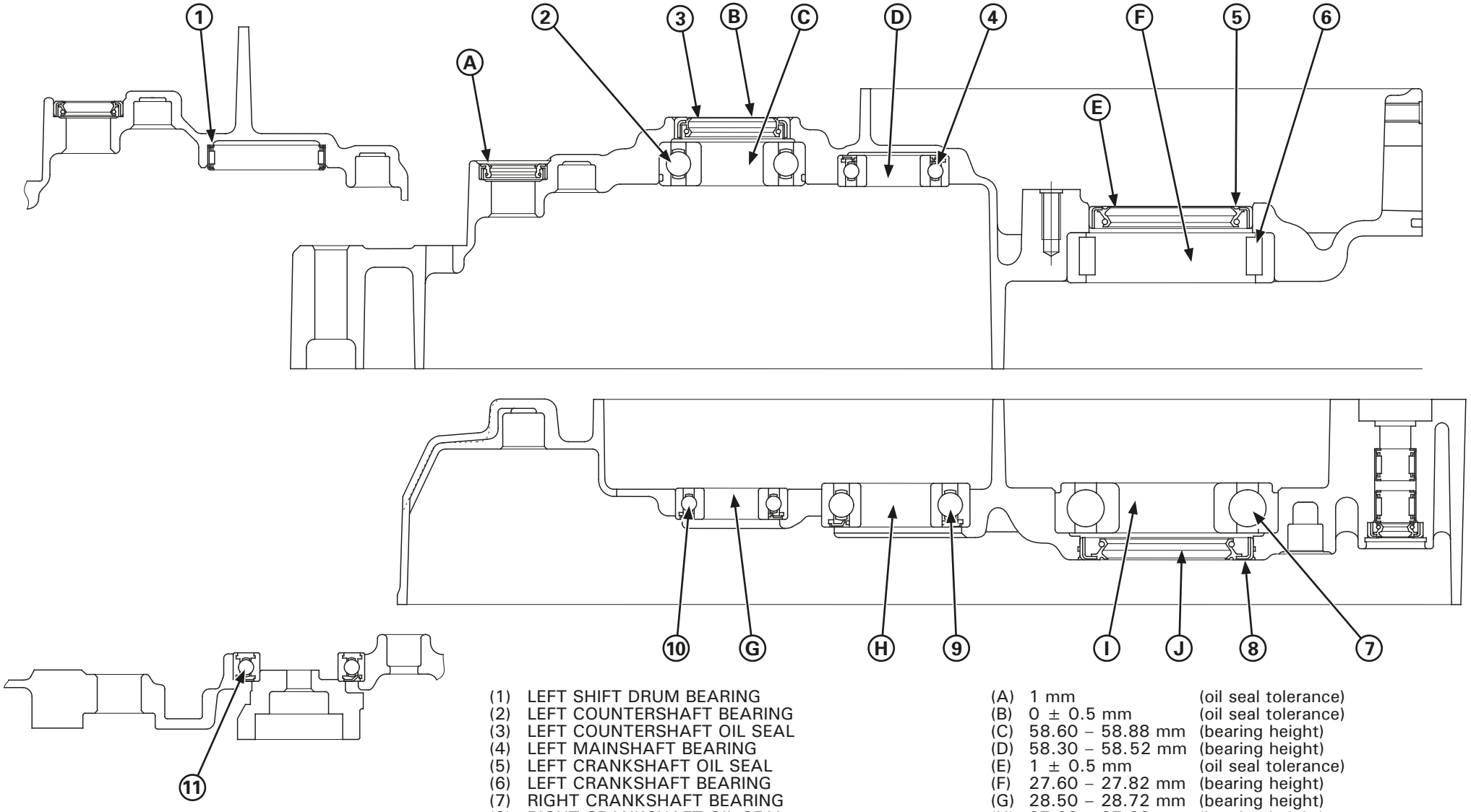

(1) LEFT SHIFT DRUM BEARING
(2) LEFT COUNTERSHAFT BEARING
(3) LEFT COUNTERSHAFT OIL SEAL
(4) LEFT MAINSHAFT BEARING
(5) LEFT CRANKSHAFT OIL SEAL
(6) LEFT CRANKSHAFT BEARING
(7) RIGHT CRANKSHAFT BEARING
(8) RIGHT CRANKSHAFT OIL SEAL
(9) RIGHT MAINSHAFT BEARING
(10) RIGHT COUNTERSHAFT BEARING
(11) RIGHT SHIFT DRUM BEARING

(A)	1 mm	(oil seal tolerance)
(B)	0 ± 0.5 mm	(oil seal tolerance)
(C)	58.60 – 58.88 mm	(bearing height)
(D)	58.30 – 58.52 mm	(bearing height)
(E)	1 ± 0.5 mm	(oil seal tolerance)
(F)	27.60 – 27.82 mm	(bearing height)
(G)	28.50 – 28.72 mm	(bearing height)
(H)	27.00 – 27.22 mm	(bearing height)
(I)	27.00 – 27.22 mm	(bearing height)
(J)	0 ± 0.5 mm	(oil seal tolerance)

Transmission Assembly

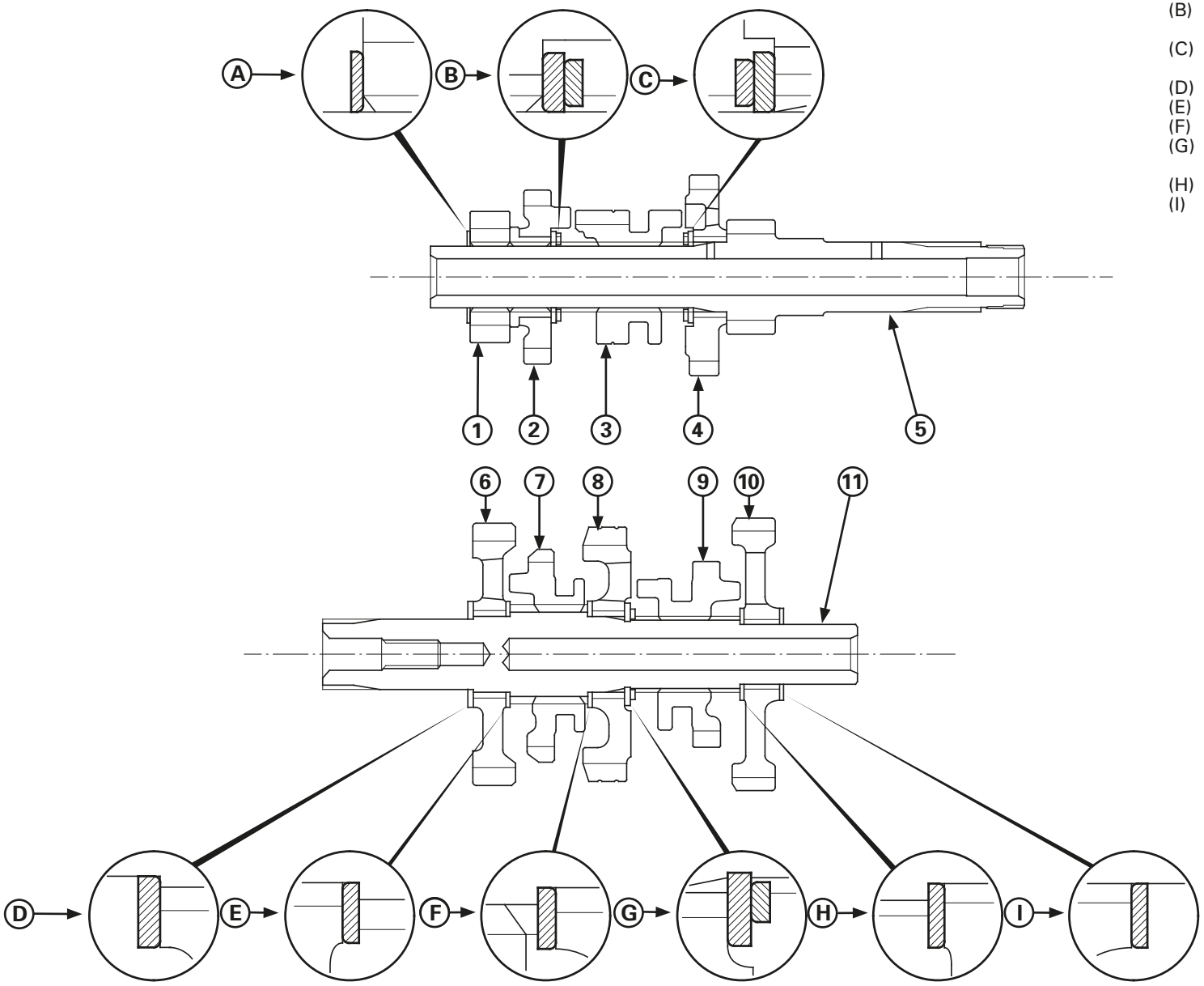

(A) THRUST WASHER, 17.2 mm
(B) SPLINED WASHER, 20 mm
SET RING, 20 mm
(C) SET RING, 20 mm
SPLINED WASHER, 20 mm
(D) THRUST WASHER, 20 X 30 X 1.5 mm
(E) THRUST WASHER, 20 X 30 X 1.0 mm
(F) THRUST WASHER, 20 X 30 X 1.0 mm
(G) THRUST WASHER, 22 X 21 X 1.0 mm
SET RING, 22 mm
(H) THRUST WASHER, 17.2 mm
(I) THRUST WASHER, 17.2 mm

(1) M2 (13T)
(2) M4 (28T)
(3) M3 (15T)
(4) M5 (22T)
(5) MAINSHAFT/M1 (15T)
(6) C2 (31T)
(7) C4 (28T)
(8) C3 (30T)
(9) C5 (22T)
(10) C1 (42T)
(11) COUNTERSHAFT

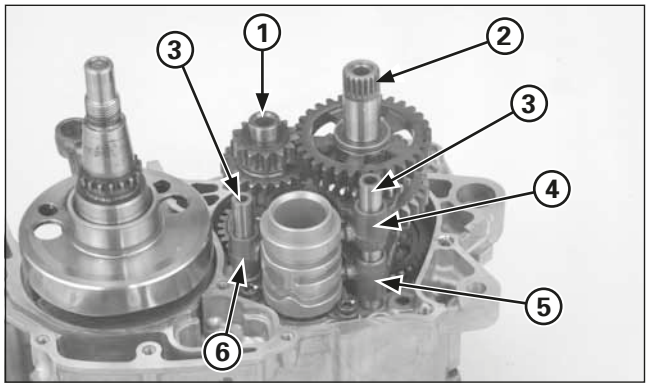

(1) MAINSHAFT
(2) COUNTERSHAFT
(3) SHIFT FORK SHAFTS
(4) LEFT SHIFT FORK
(5) RIGHT SHIFT FORK
(6) CENTER SHIFT FORK

Crankcase Combination

Clean the crankcase mating surfaces before assembling and check for wear or damage.
If the minor roughness or irregularities on the crankcase mating surfaces, dress them with an oil stone.

Lubricate the crankshaft bearing with engine oil.
Lubricate the transmission bearings with transmission oil.

Install the crankshaft into the right crankcase.

Install the mainshaft and countershaft as an assembly into the right crankcase.
Install the center shift fork with its identification mark facing in.
Install the right and left shift forks with their identification marks facing out.
Install the shift drum.
Install the shift forks.

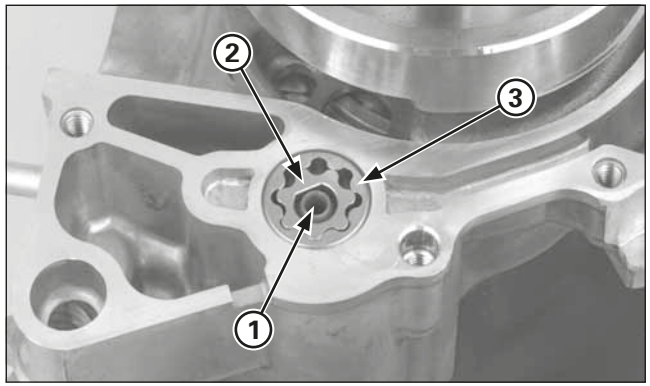

(1) OIL PUMP SHAFT
(2) INNER ROTOR
(3) OUTER ROTOR

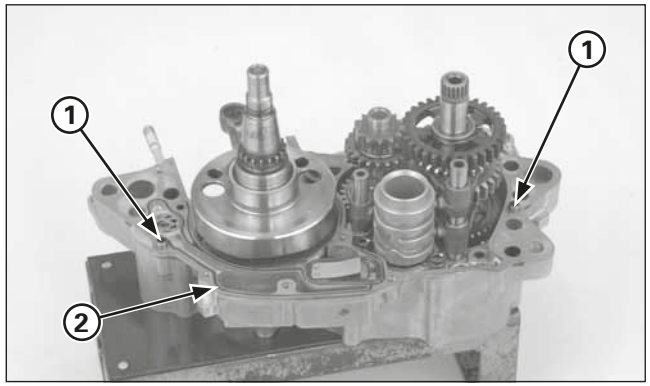

(1) DOWEL PINS
(2) NEW GASKET

Install the oil pump shaft, oil pump inner rotor and outer rotors.

Install the dowel pins and new gasket.

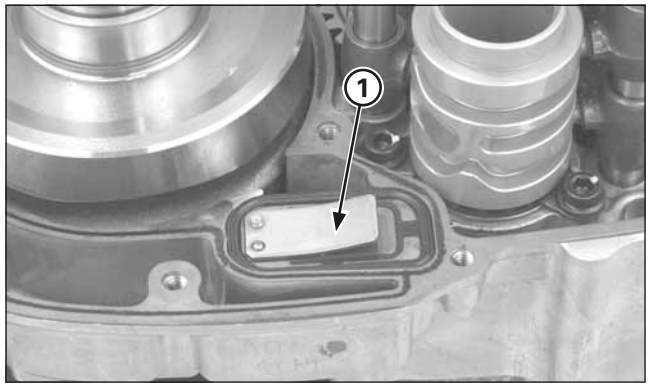

(1) ONE-WAY REED VALVE

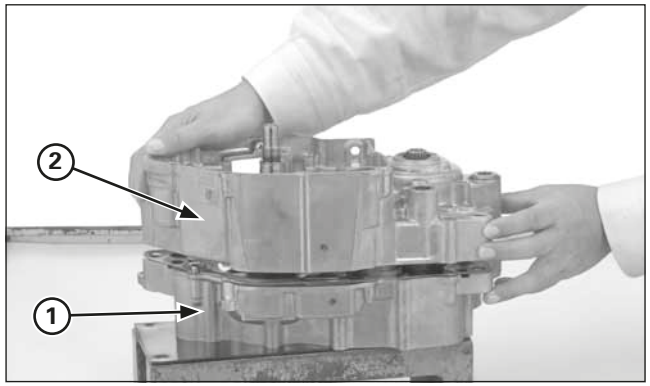

(1) RIGHT CRANKCASE
(2) LEFT CRANKCASE

Install the one-way reed valve into the right crankcase.

Place the left crankcase onto the right crankcase.

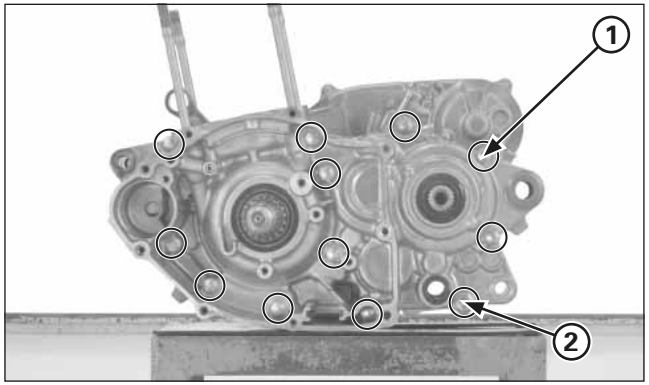

(1) CRANKCASE BOLTS
(2) NEW SEALING WASHER/OIL DRAIN BOLT

Install the crankcase bolts.
Tighten the crankcase bolts in a crisscross pattern in 2 – 3 steps.
Install the transmission oil drain bolt with a new sealing washer, and tighten it to the specified torque.

Torque: 22 N•m (2.2 kgf•m, 16 lbf•ft)

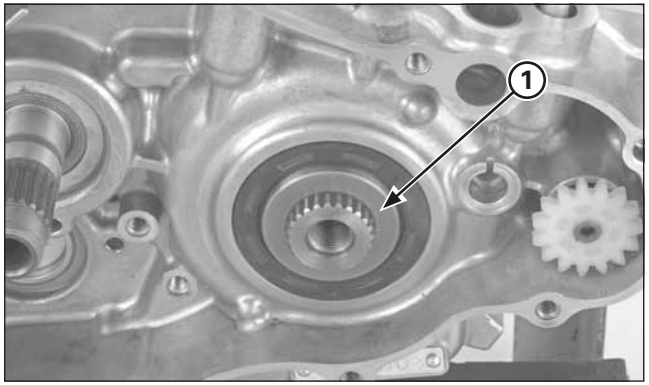

(1) DRIVE GEAR COLLAR

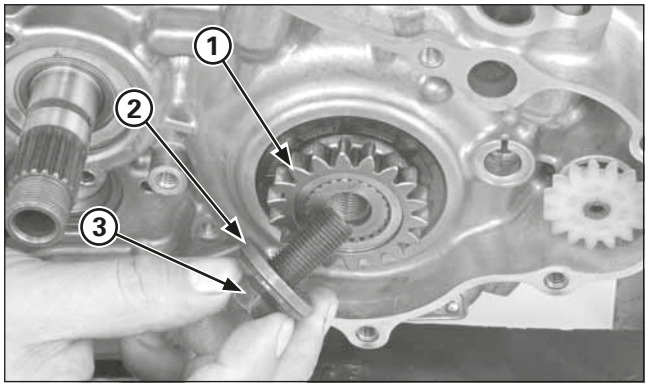

(1) PRIMARY DRIVE GEAR
(2) WASHER
(3) SPECIAL BOLT

Install the primary drive gear collar onto the crankshaft.

Install the primary drive gear with its groove side facing out.
Apply oil to the primary drive gear special bolt threads and seating surface.
Install the washer and special bolt.

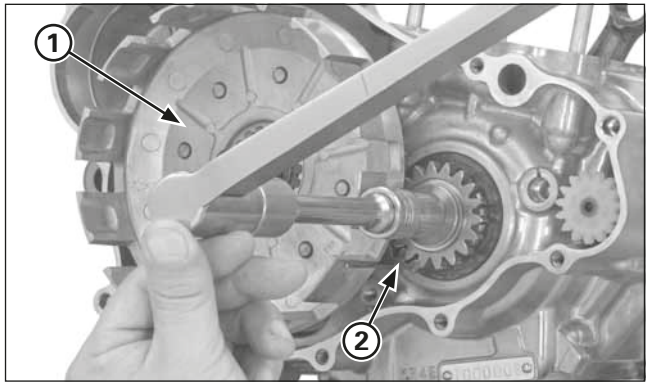

(1) CLUTCH OUTER
(2) GEAR HOLDER

Temporarily install the clutch outer guide, needle bearing and clutch outer onto the mainshaft and attach the gear holder between the primary drive and driven gears.

Tool:
Gear holder 07724-001A100

Tighten the primary drive gear bolt to the specified torque.

Torque: 108 N•m (11.0 kgf•m, 80 lbf•ft)

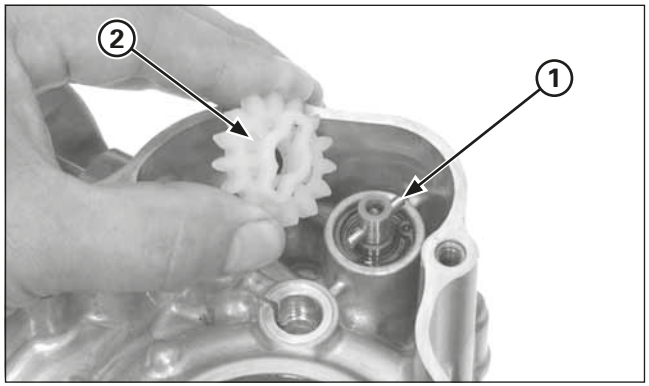

(1) DRIVE PIN
(2) OIL PUMP DRIVEN GEAR

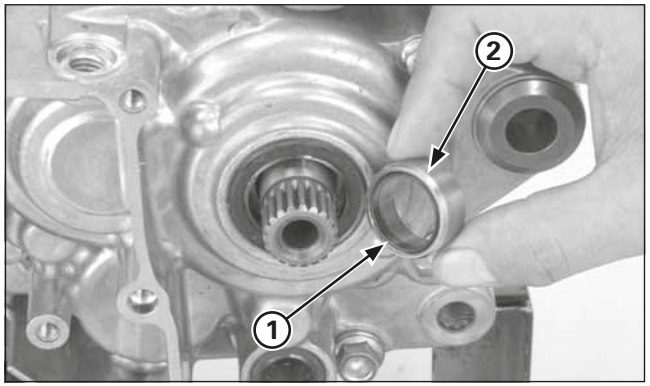

(1) NEW O-RING
(2) COUNTERSHAFT COLLAR

Install the drive pin into the oil pump drive shaft hole.
Install the oil pump driven gear while aligning its groove with the drive pin.

Apply grease to the new O-ring and install it into the countershaft collar groove.
Install the countershaft collar.

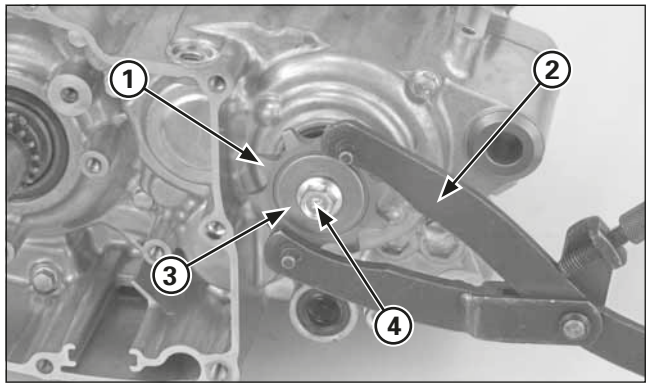

(1) DRIVE SPROCKET
(2) UNIVERSAL HOLDER
(3) SPRING WASHER
(4) BOLT

Install the drive sprocket.
Install the spring washer and drive sprocket bolt.
Hold the drive sprocket with universal holder, tighten the special bolt to the specified torque.

Torque: 31 N•m (3.2 kgf•m, 23 lbf•ft)

Install the removed parts in the reverse order of removal.

Tool:
Universal holder 07725-0030000

Memo

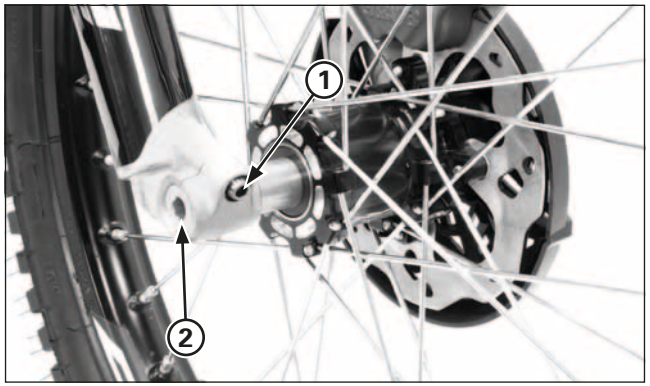

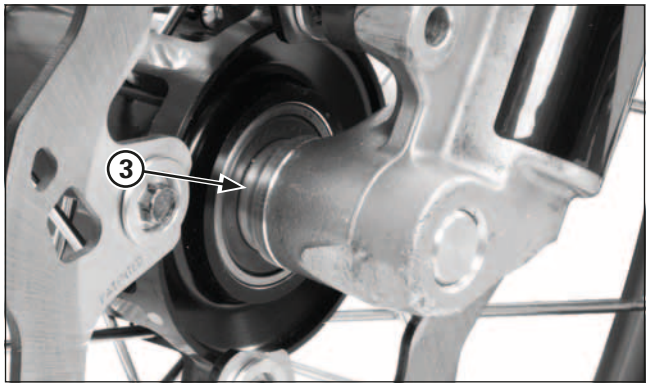

(1) AXLE PINCH BOLT
(2) AXLE
(3) SIDE COLLAR

Front Wheel

Removal

Remove the brake caliper mounting bolts, disc cover and collars.
Loosen the axle pinch bolt.

Support the motorcycle and front wheel off the ground.
Remove the axle, left side collar and front wheel.

Do not depress the brake lever after the front wheel is removed.
The caliper pistons will move and make reassembly difficult.

Disassembly/Assembly

⚠ WARNING

A contaminated brake disc or pad reduces stopping power, and can cause a serious injury or death.

Discard contaminated pads and clean a contaminated disc with a high quality brake degreasing agent.

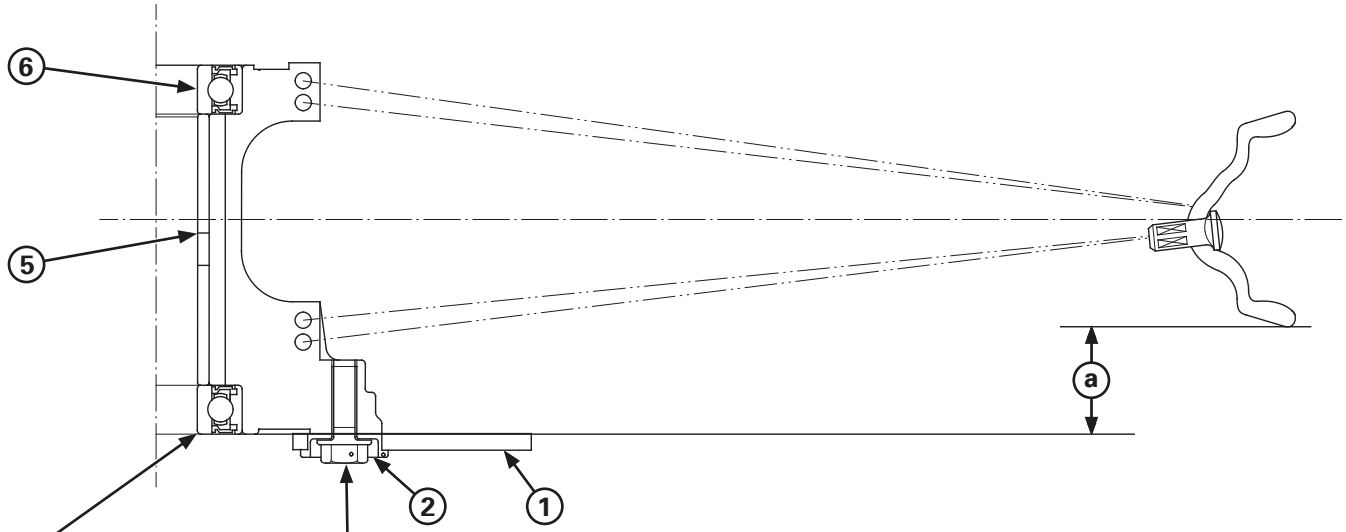

4 Drive the bearing into the hub until it stops.

3 After dissassembly, replace the bolts with new ones.
Torque: 18 N•m (1.8 kgf•m)

(1) BRAKE DISC
(2) COLLAR
(3) DISC BOLT
(4) LEFT WHEEL BEARING
(5) DISTANCE COLLAR
(6) RIGHT WHEEL BEARING

(a) 27.25 ± 1 mm (1.07 ± 0.0394 in)

Spokes: Check spoke tension frequently between the first few rides. As the spokes, spoke nuts, and rim contact points seat-in, the spokes may need to be retightened.

Once past this initial seating-in period, the spokes should hold their tension. Still, be sure your race maintenance program includes checking spoke tension and overall wheel condition on a regular basis.

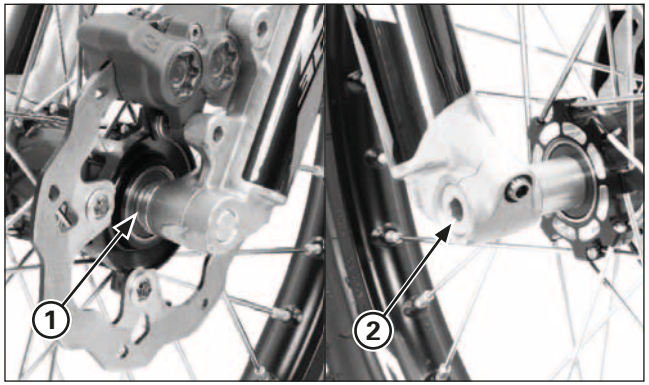

(1) SIDE COLLAR
(2) AXLE

Installation

Clean the surfaces where the axle and axle clamps contact each other.
Place the front wheel between the fork legs.

Apply thin layer of grease to the axle surface.
Apply grease to the axle threads.
Install the axle from the right side through the wheel and left side collar.

Tighten the axle to the specified torque.

Torque: 69 N•m (7.0 kgf•m, 51 lbf•ft)

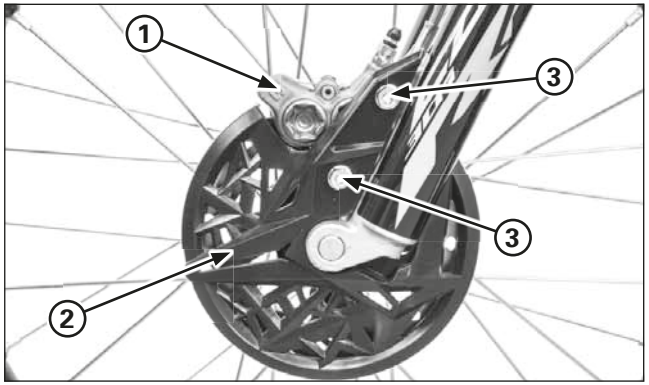

(1) BRAKE CALIPER
(2) DISC COVER
(3) BOLTS

Install the brake caliper, flange collars and disc cover.
Apply a locking agent to the threads and tighten the mounting bolts to the specified torque.

Torque: 26 N•m (2.7 kgf•m, 20 lbf•ft)

With the front brake applied, pump the fork up and down several times to seat the axle and check the front brake operation.

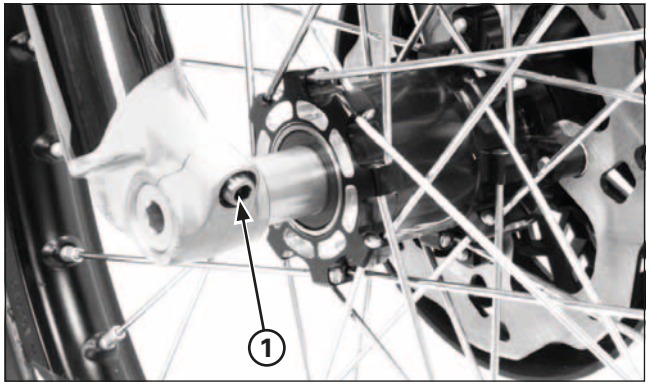

(1) AXLE PINCH BOLT

While keeping the fork parallel, tighten the axle pinch bolt to the specified torque.

Torque: 23 N•m (2.3 kgf•m, 17 lbf•ft)

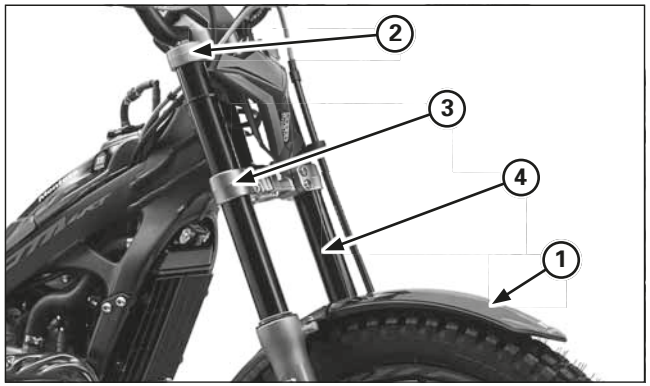

(1) FRONT FENDER
(2) TOP BRIDGE
(3) BOTTOM BRIDGE
(4) FORK LEG

Fork

Removal

Remove the front wheel (page 5-1).

Remove the front fender.
Loosen the top bridge pinch bolt.
If the forks are to be disassembled, loosen the fork bolt.

NOTICE

To avoid damaging the fork bolt threads, loosen the top bridge pinch bolt before loosening the fork bolts.

Loosen the bottom bridge pinch bolts, and pull the fork tube down and out.

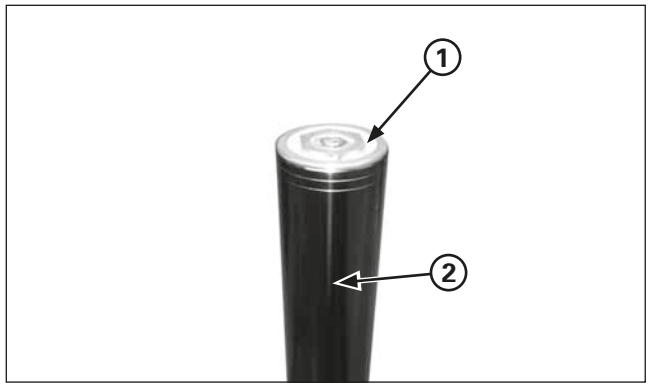

(1) FORK BOLT
(2) FORK LEG

Right Fork Disassembly

Before disassembling the fork, clean the entire sliding surface and the bottom of the fork slider.

Be careful not to scratch the fork tube.
A scratched fork tube will damage the seal, causing an oil leak.

Hold the fork tube, remove the fork bolt and slide the fork tube down.

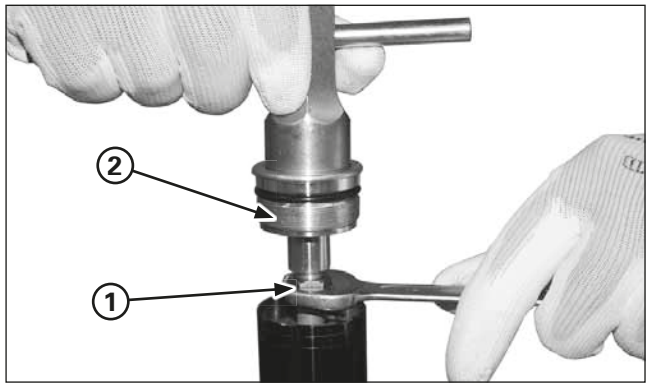

(1) LOCK NUT
(2) FORK BOLT

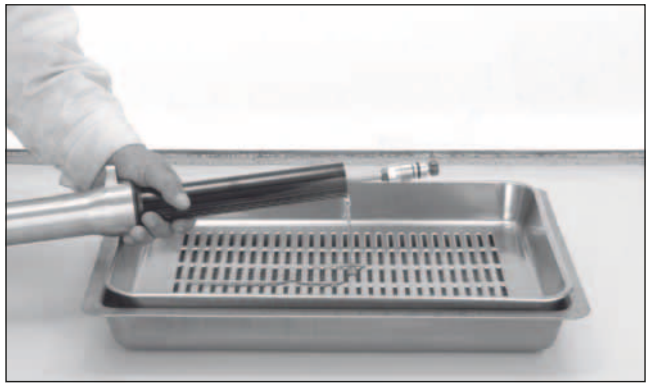

Make sure the damping adjuster is in clicked position and is not in between the position.
Hold the lock nut and remove the fork bolt from the damper rod.
Do not remove the lock nut from the damper rod.

Pour out the fork fluid.

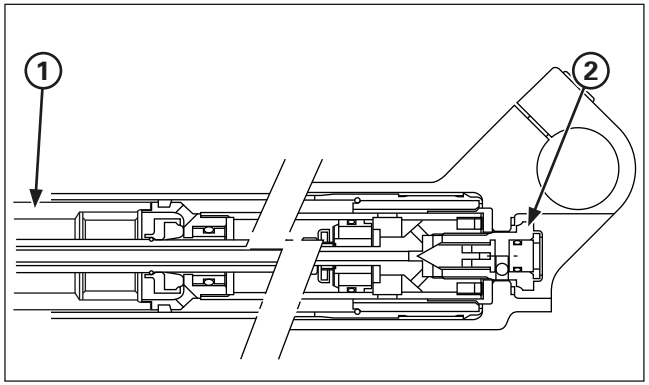

(1) FORK DAMPER
(2) RIGHT FORK CENTER BOLT

Hold the axle holder in a vise protected with a piece of woods or soft jaws to avoid damage.
Do not overtighten.

Loosen the right fork center bolt.
Remove the center bolt and sealing washer.

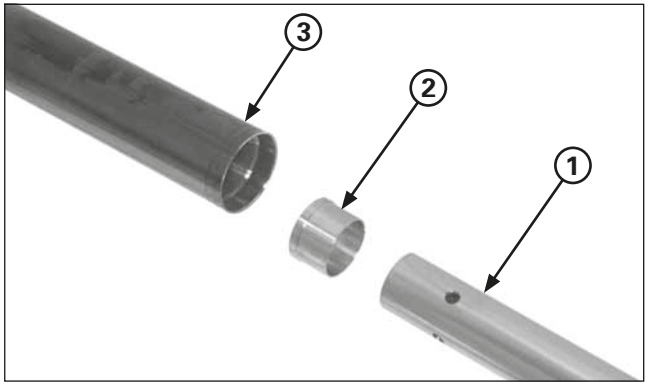

(1) FORK DAMPER
(2) CENTERING PLATE
(3) FORK TUBE

Remove the fork damper assembly and centering plate from the fork tube.

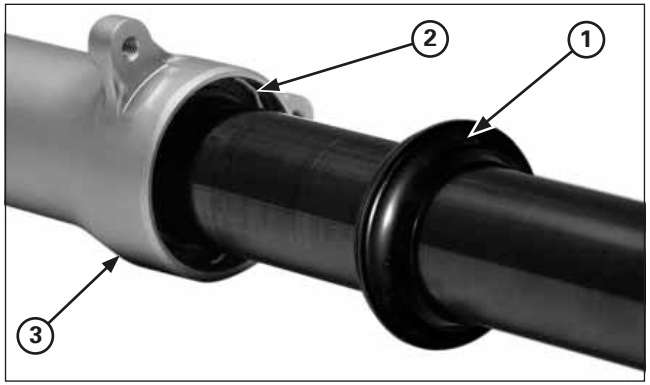

(1) DUST SEAL
(2) STOP RING
(3) FORK SLIDER

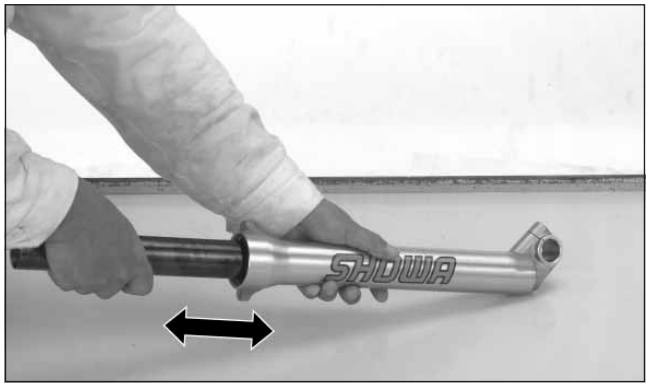

Remove the dust seal and stop ring being careful not to scratch the fork tube.

In quick successive motions, pull the fork tube out of the slider.
Empty the fork fluid from the damper by pumping the damper rod 8 - 10 times.

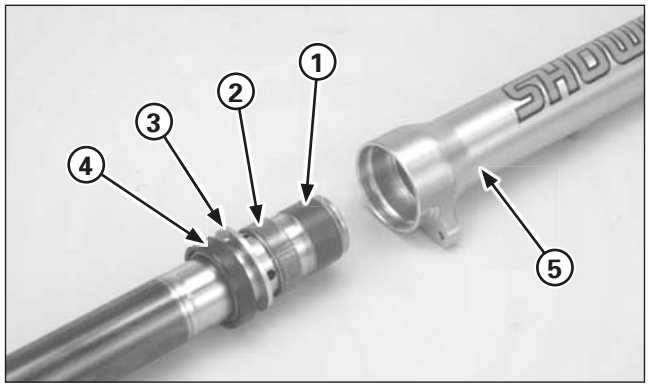

(1) FORK TUBE BUSHING
(2) GUIDE BUSHING
(3) BACK-UP RING
(4) OIL SEAL
(5) FORK SLIDER

Check that the fork tube moves smoothly in the slider.
If it does not, check the fork tube bending or damage, and the bushings for wear or damage. If the slider and bushing are normal, check the fork tube.

Carefully remove the fork tube bushing by prying the slot with a screwdriver until the bushing can be pulled off by hand.
Be careful not to scratch the teflon coating of the bushing.

Remove the guide bushing, back-up ring and oil seal from the fork tube.

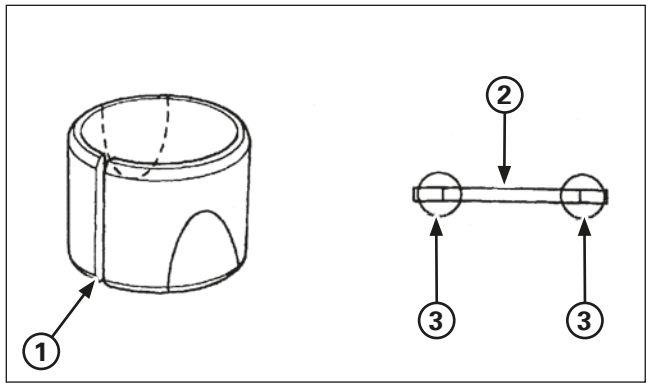

(1) BUSHING
(2) BACK-UP RING
(3) INSPECTION POINT

Right Fork Inspection

Check the following items (specifications; page 2-4):
- Fork tube for score marks, scratches and excessive wear
- Fork tube runout
- Fork slider for damage or deformation
- Fork damper for damage

Bushing/Back-up Ring
Check the bushings for excessive wear or scratches.
Remove any metal powder inside the slider and guide bushings with a nylon brush and fork fluid.
If copper appears on the entire surface, replace the bushing.

Replace the back-up ring if there is any distortion.

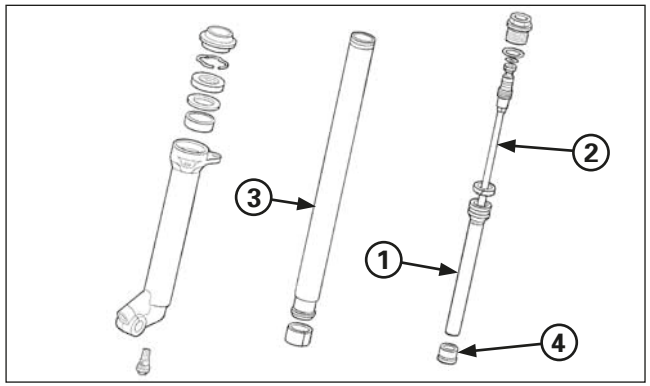

(1) DAMPER ASSEMBLY
(2) DAMPER ROD
(3) FORK TUBE
(4) CENTERING PLATE

Fork Damper
Check the fork damper assembly for damage or deformation.
Check the damper rod for bend or other damage.

Fork tube/centering plate
Check the fork tube for bent or deformation.
Check the centering plate for damage.

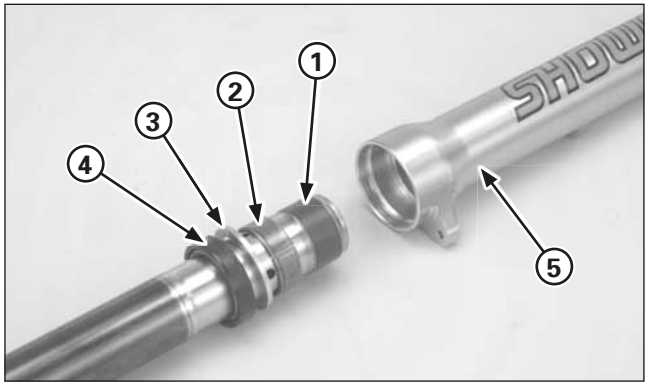

(1) FORK TUBE BUSHING
(2) GUIDE BUSHING
(3) BACK-UP RING
(4) OIL SEAL
(5) FORK SLIDER

Right Fork Assembly

Clean the parts thoroughly with non-flammable or high flush point solvent before assembly.

Install the following to the fork tube:
– Fork tube bushing
– Guide bushing
– Back-up ring

Coat the guide and fork tube bushings with recommended fork fluid.
Install the fork tube assembly into the slider.

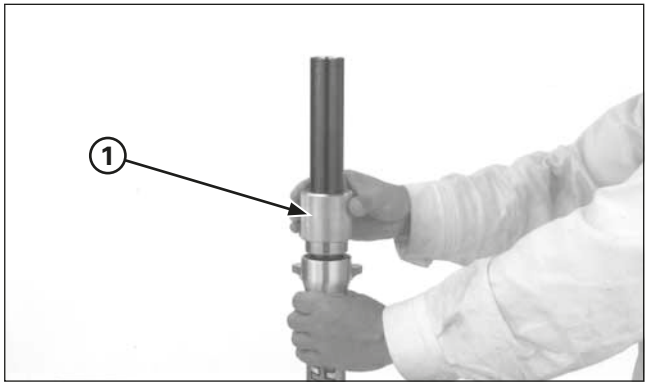

(1) FORK SEAL DRIVER

Using the special tool, drive the guide bushing and back-up ring until the stop ring groove is fully stuck in the fork slider base.

Install the oil seal (spring up) in the fork slider. Drive the oil seal using the special tool, performing a constant pressure until stops in back-up ring.

Tool:
Fork seal driver **07947–4630100**

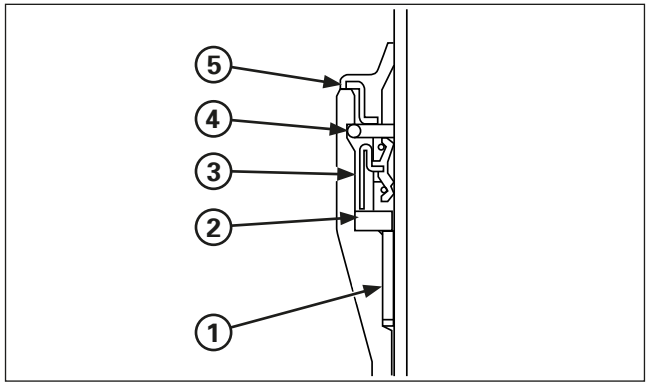

(1) GUIDE BUSHING
(2) BUCK-UP RING
(3) OIL SEAL
(4) STOP RING
(5) DUST SEAL

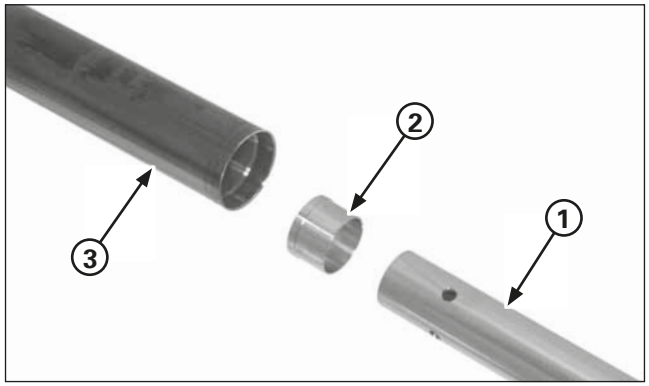

(1) FORK DAMPER
(2) CENTERING PLATE
(3) FORK TUBE

Install the stop ring into the slider groove securely.
Install the dust seal.

Install the centering plate and fork damper into the fork tube.

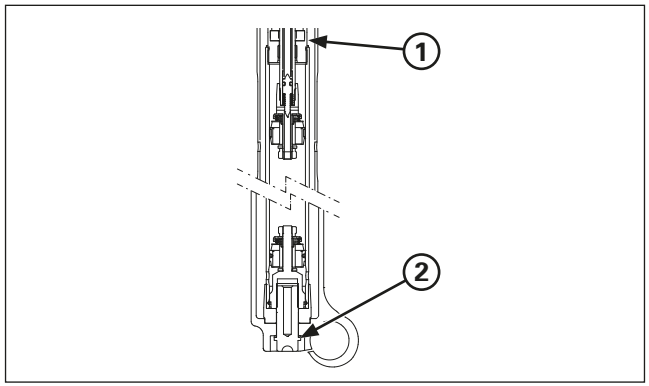

(1) FORK DAMPER
(2) RIGHT FORK CENTER BOLT

Hold the axle holder in a vise protected with a piece of woods or soft jaws to avoid damage.
Do not overtighten the vise.

Install the right fork center bolt with a new sealing washer.

Hold the fork damper using the special tool, then tighten the right fork center bolt to the specified torque.

Tool:

Holder handle	**07TMB-001010A**
Holder attachment, 4 pin	**07AMB-NN4A100**

Torque: 23.5-25.5 N•m (2.4-2.6 kgf•m)

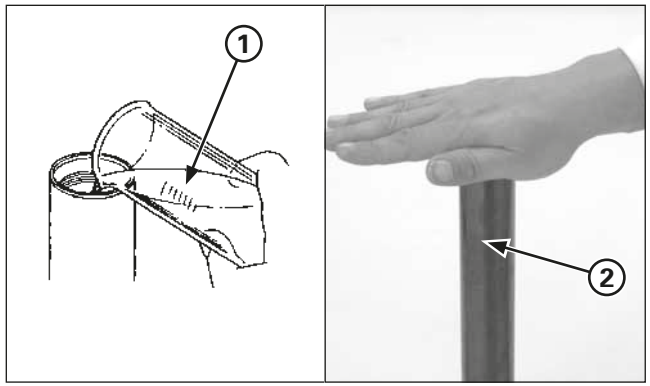

(1) FORK FLUID
(2) FORK TUBE

Pour recommended fork fluid in the fork leg.

Specified fork fluid:
Showa SS05 (SAE 5W) or equivalent

Bleed the air as follows:
1. Extend the fork without bringing to its maximum extension. Cover the top of the fork tube with your hand and compress the fork slowly several times.

NOTICE

Totally extending fork may cause oil leakage.

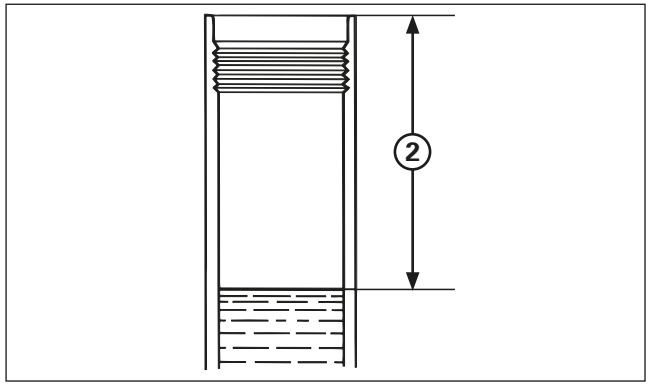

(1) FORK DAMPER ROD
(2) OIL LEVEL

2. Pump the damper rod 8 - 10 times.
3. Make sure no air in fork damper by slowly pull the damper rod up. If the resistance is felt at the top end, pump the damper rod again.

Wait 2 – 3 minutes before measuring the oil level.
Measure the oil level from top of the fork tube, with the fork fully compresed.

Standard oil level: 51 mm (2.0 in)

Oil capacity (orientative): 405 cm3 (13.7 US oz, 14.3 Imp oz)

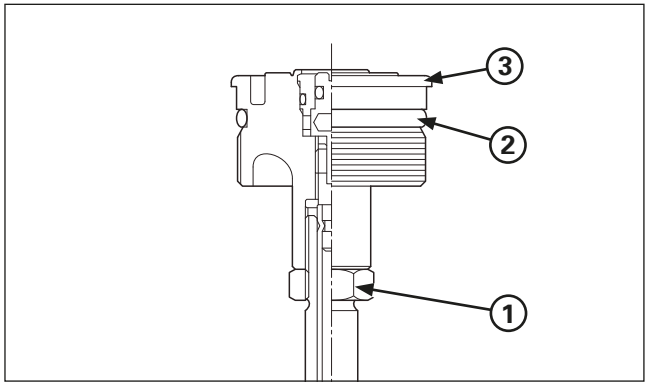

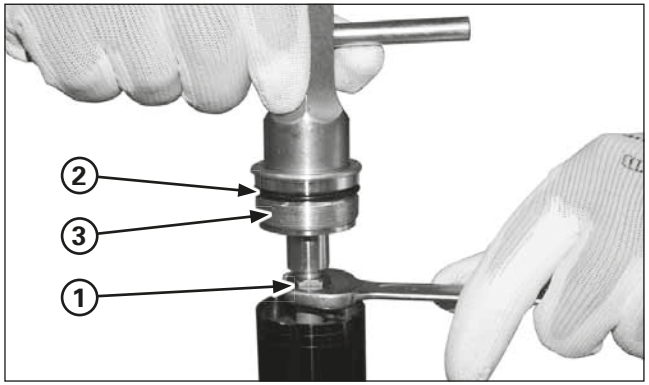

(1) LOCK NUT
(2) NEW O-RING
(3) FORK BOLT

Install a new O-ring onto the fork bolt groove.
Screw the fork bolt on the lock nut from the damper rod until it seats.
Hold the lock nut and tighten the fork bolt to the specified torque.

Torque: 15 N•m (1.5 kgf•m)

Apply recommended fork fluid to the O-ring, then screw the fork bolt into the fork tube.

Torque: 13 N•m (1.3 kgf•m)

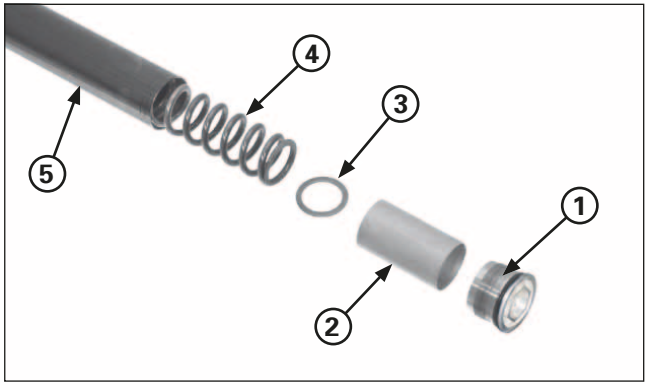

(1) FORK BOLT
(2) DISTANCE COLLAR
(3) SPRING SEAT
(4) FORK SPRING
(5) FORK TUBE

Left Fork Disassembly

Before disassembling the fork, clean the entire sliding surface and the bottom of the fork slider.

Be careful not to scratch the fork tube.
A scratched fork tube will damage the seal, causing an oil leak.

The fork bolt under spring pressure.
Before removing the fork bolt, turn the pre-load adjuster softest position.
Remove the fork bolt from the fork tube.

Remove the distance collar, spring seat and fork spring.
Pour out the fork fluid.

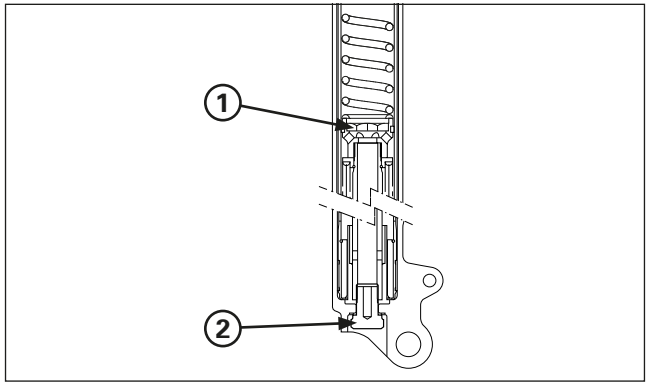

(1) CILINDER ASSY
(2) CENTER BOLT

Hold the axle holder in a vise protected with a piece of wood or soft jaws to avoid damage.
Do not overtighten.

Loosen the left fork center bolt.

Remove the center bolt and sealing washer.

Remove the following items using the same procedure as the right fork disassembly (page 5-3):
- Dust seal
- Stop ring
- Fork tube, desclavando el buje guía sobre la botella de la horquilla.

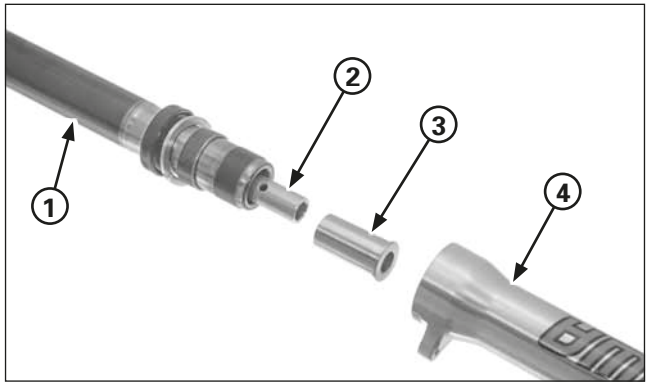

(1) FORK TUBE
(2) CILINDER ASSY
(3) TAPERED BUSHING
(4) FORK BOTTLE

Remove the tapared bushing from the cilinder assy.

NOTICE

Be careful not to damage the tapared bushing.

Remove the cilinder assy from the fork tube.

Remove the following items using the same procedure as the right fork disassembly (page 5-3):
- Oil seal
- Back-up ring
- Guide bushing
- Fork tube bushing

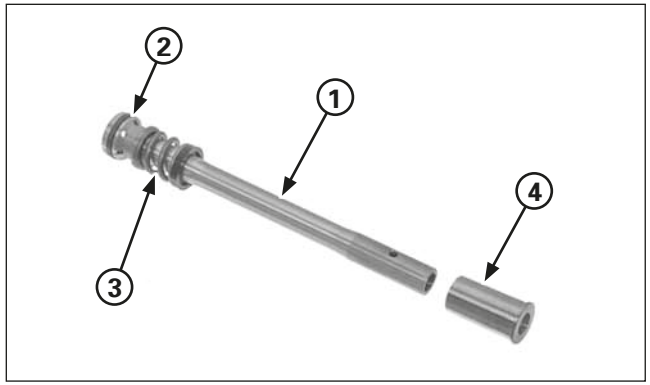

(1) CILINDER ASSY
(2) PISTON RING
(3) REBOUND SPRING
(4) TAPERED BUSHING

Left Fork Inspection

Check the following items (page 2-4):
- Inside fork slider for damage or deformation
- Fork tube runout
- Fork spring free length
- Fork tube for score marks, scratches and excessive wear
- Bushing/back-up ring (page 5-5)
- Fork piston ring for wear or damage
- Tapared bushing for damage
- Rebound spring for fatigue or other damage

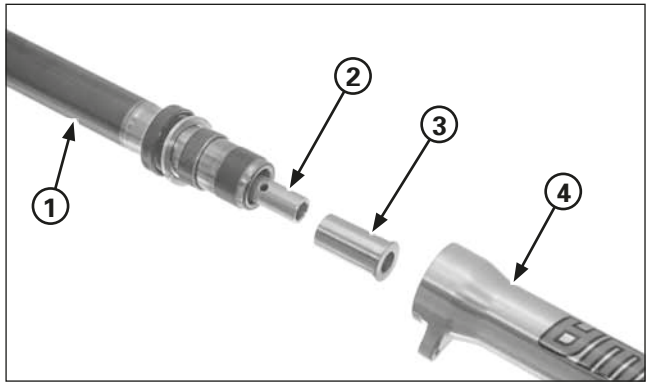

(1) FORK TUBE
(2) CILINDER ASSY
(3) TAPERED BUSHING
(4) FORK BOTTLE

Left Fork Assembly

Clean the parts thoroughly with non-flammable or high flush point solvent before assembly.

Apply fork fluid to the piston ring.
Install the cilinder assy into the fork tube.
Install the tapered bushing on the end of the cilinder assy.

NOTICE

The tapered bushing is easy to scratched or deformed. Take care not to damage it when assembling it.

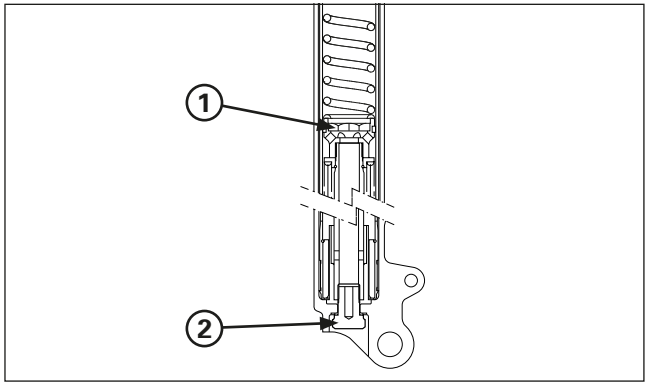

(1) CILINDER ASSY
(2) CENTER BOLT

Hold the axle holder in a vise protected with a piece of wood or soft jaws to avoid damage.
Do not overtighten the vise.

Install the center bolt with a new sealing washer.
Tighten the center bolt to the specified torque.

Torque: 34 N•m (3.4 kgf•m, 25.1 lbf•ft)

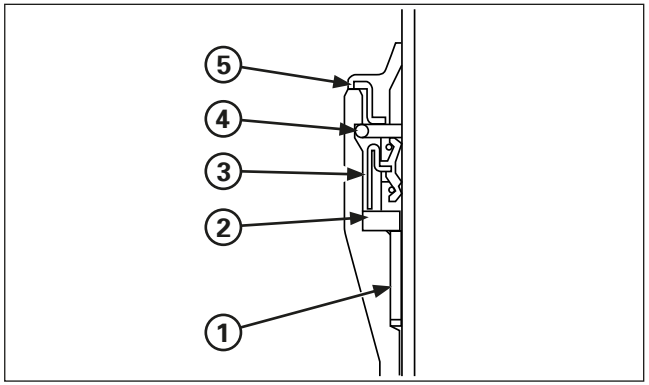

(1) GUIDE BUSHING
(2) BACK-UP RING
(3) OIL SEAL
(4) STOP RING
(5) DUST SEAL

Install the following parts onto the fork tube using the same procedure as the right fork (page 5-6):
– Fork tube bushing
– Guide bushing
– Back-up ring

Using the special tool, drive the guide bushing and back-up ring until the stop ring groove is fully stuck in the fork slider base.

Install the oil seal (spring up) in the fork slider. Drive the oil seal using the special tool, performing a constant pressure until stops in back-up ring.

Tool:
Fork seal driver 07947–4630100

Install the stop ring into the slider groove securely.
Install the dust seal.

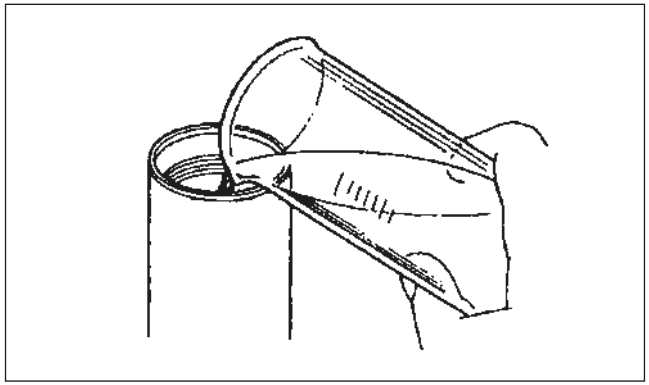

Pour half the required amount of recommended fork fluid in the fork tube.

Specified fork fluid:
Showa SS05 (SAE 5W) o equivalente

Pump the fork tube slowly 8-10 times.
Pour additional fluid to the specified capacity.

Oil level: 87 mm (3.4 in)

Oil capacity (orientative): 410 cc (13.9 US oz, 14.4 Imp oz)

NOTICE

Totally extending fork may cause oil leakage.

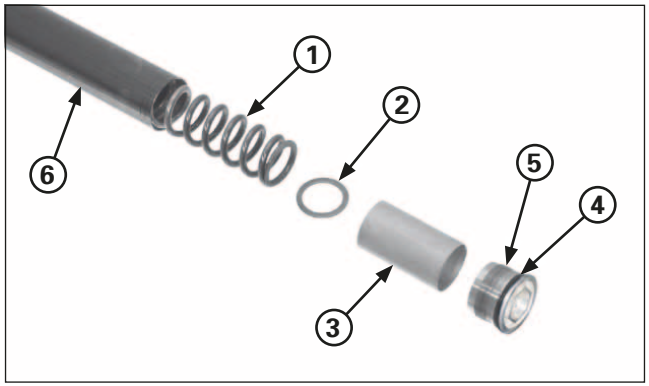

(1) FORK SPRING
(2) SPRING SEAT
(3) DISTANCE COLLAR
(4) O-RING (NEW)
(5) FORK BOLT
(6) FORK TUBE

Install the fork spring, spring seat and the distance collar.

Apply recommended fork fluid to the new O-ring, then screw the fork bolt into the fork tube.

Torque: 13 N•m (1.3 kgf•m, 9.3 lbf•ft)

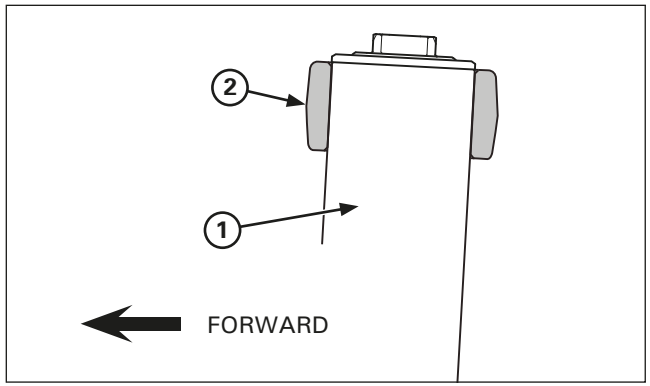

(1) FORK TUBE
(2) TOP BRIDGE

Installation

Install the fork tube.
Raise the fork through the bottom bridge and top bridge.

Place the fork tubes in the top clamp level as shown in the picture.

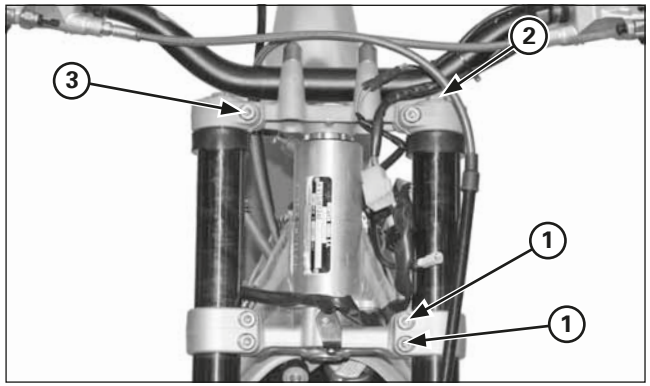

(1) BOTTOM BRIDGE PINCH BOLTS
(2) FORK BOLT
(3) TOP BRIDGE PINCH BOLTS

Tighten the bottom bridge pinch bolts to the specified torque.

Torque: 21 N•m (2.1 kgf•m, 14 lbf•ft)

Overtightening the pinch bolts can deform the outer tube. Deformed outer tube must be replaced.

Tighten the fork bolt.

Tighten the top bridge pinch bolt to the specified torque.

Torque: 21 N•m (2.1 kgf•m, 14 lbf•ft)

Return spring pre-load and rebound adjuster to their original positions as noted during removal.

Install the following:
– Front fender
– Front wheel (page 5-2)

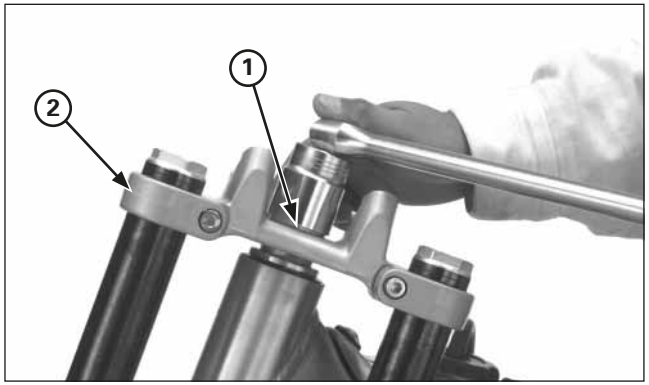

(1) STEM NUT
(2) TOP BRIDGE

Steering stem

Disassembly

Remove the following:
– Handlebar
– Front wheel (page 5-1)
– Front fender

Remove the steering stem nut and washer.

Remove the fork legs (page 5-3).
Remove the top bridge.

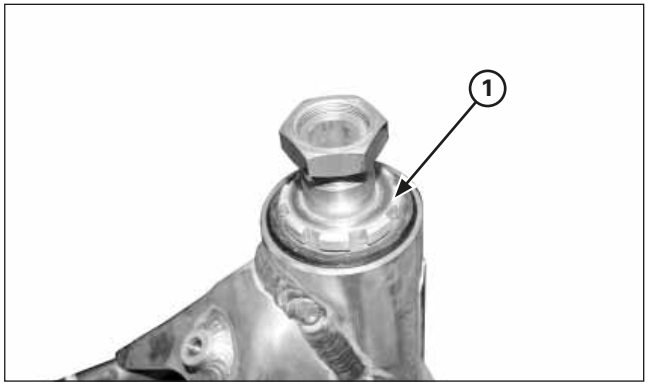

(1) ADJUSTING NUT

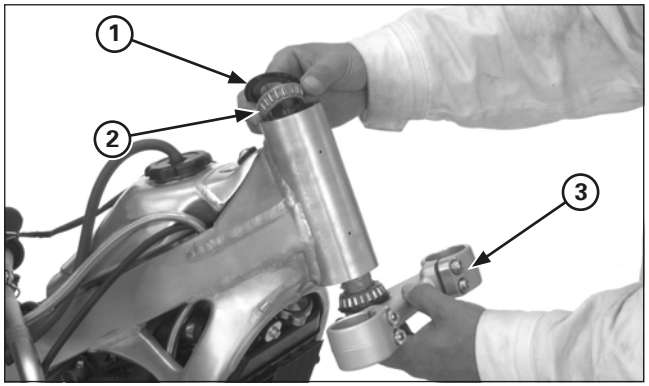

(1) DUST SEAL
(2) UPPER BEARING
(3) STEERING STEM

Remove the stem bearing adjusting nut.

Remove the following;
– Dust seal
– Upper bearing
– Steering stem/lower bearing

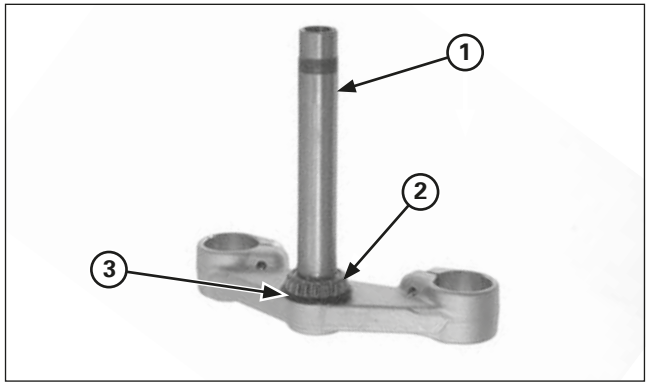

(1) STEM
(2) LOWER BEARING
(3) DUST SEAL

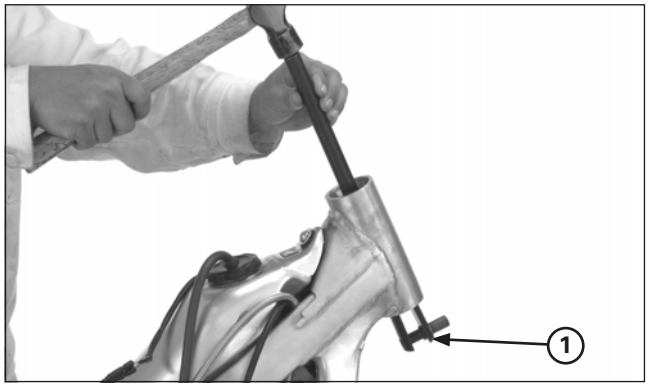

(1) BALL RACE REMOVER

Remove the lower bearing and dust seal from the steering stem.

Remove the upper and lower bearing races from the steering head using the special tools.

Tool:

Ball race remover	**07953-MJ1000B**
Drift	

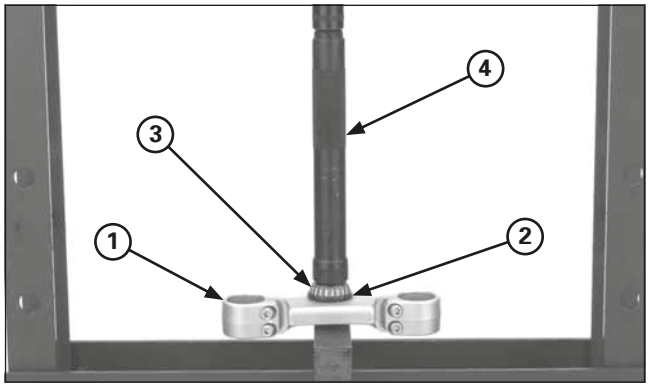

(1) STEM
(2) DUST SEAL
(3) BEARING
(4) STEERING STEM DRIVER

Install new dust seal onto the steering stem.
Install the new lower bearing into the steering stem using a hydraulic press and driver.

Tool:

Steering stem driver	**07946-MB00000**
Steering stem driver attach	**07946-KA6000A**

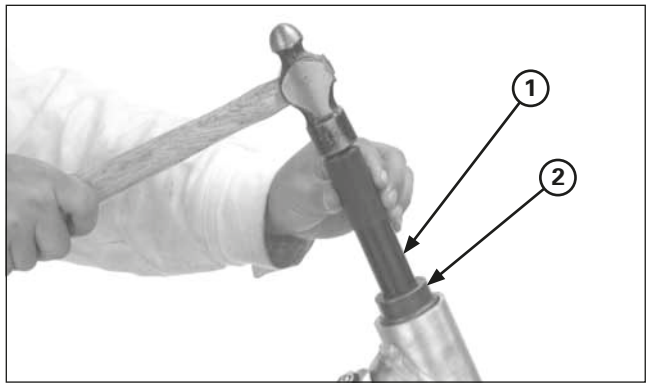

(1) DRIVER
(2) ATTACHMENT

Tools:

Driver	**07749-0010000**
Attachment, 42 x 47 mm	**07746-0010300**

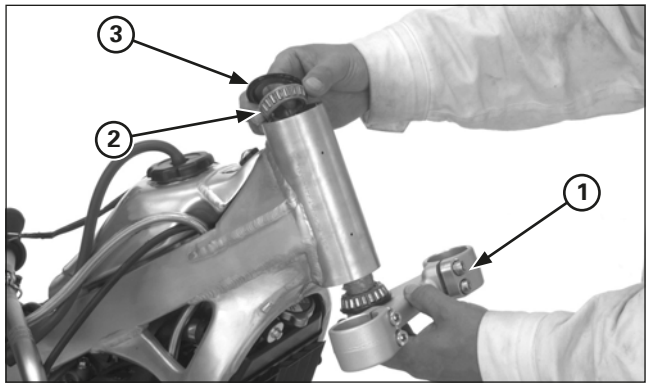

(1) STEM
(2) UPPER BEARING
(3) DUST SEAL

Install new bearing races.

Pack the upper and lower bearings with grease.
Install the steering stem, upper bearing and dust seal.

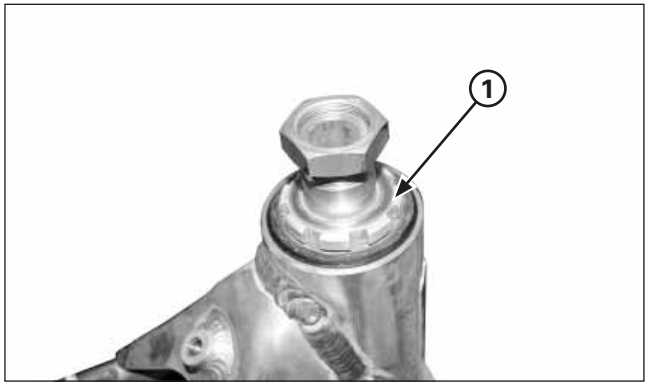

(1) ADJUSTING NUT

Screw the stem bearing adjusting nut all the way with your fingers.

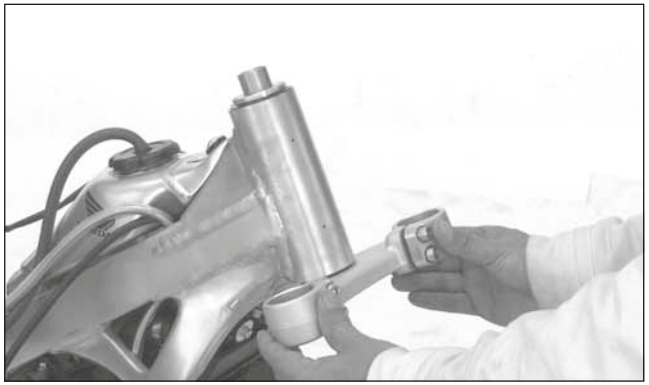

Turn the steering stem lock-to-lock 5 times to seat the bearings and retighten the adjusting nut to the specified torque.

Torque: 5 N•m (0.5 kgf•m, 3.7 lbf•ft)

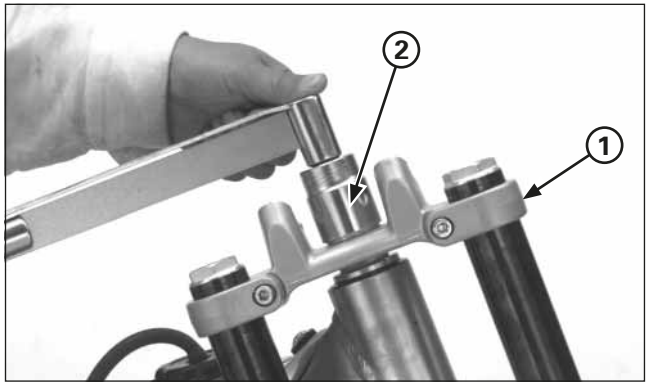

(1) TOP BRIDGE
(2) STEM NUT

Apply grease to the stem nut thread and seating surfaces.
Install the top bridge, washer and stem nut.
Temporarily install both fork legs.
Apply grease to the top bridge pinch bolt threads and seating surfaces.
Install and tighten the top bridge pinch bolts to the specified torque.

Torque: 21 N•m (2.1 kgf•m, 15.4 lbf•ft)

Tighten the stem nut to the specified torque.

Torque: 99 N•m (10 kgf•m, 65 lbf•ft)

Recheck the steering stem adjustment before installing the removed parts.

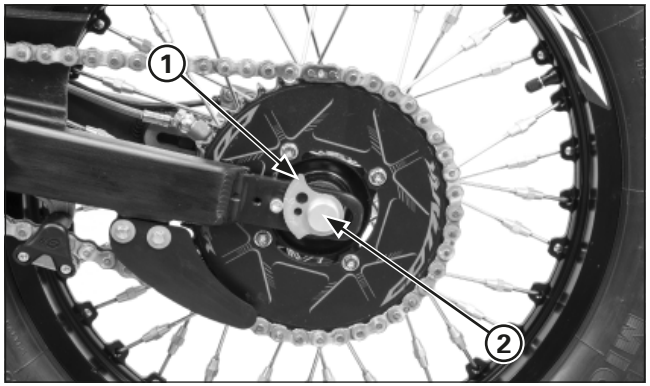

(1) ADJUSTER
(2) AXLE

Rear Wheel

Removal

Raise the rear wheel off the ground and support it with a block or maintenance stand under the engine.

Remove the following:
- Axle nut and drive chain adjuster
- Drive chain
- Axle, drive chain adjuster and rear wheel

Do not depress the brake pedal after the rear wheel is removed.
The caliper pistons will move and make reassembly difficult.

Disassembly/Assembly

⚠ WARNING

A contaminated brake disc or pad reduces stopping power, and can cause a serious injury or death.

Discard contaminated pads and clean a contaminated disc with a high quality brake degreasing agent.

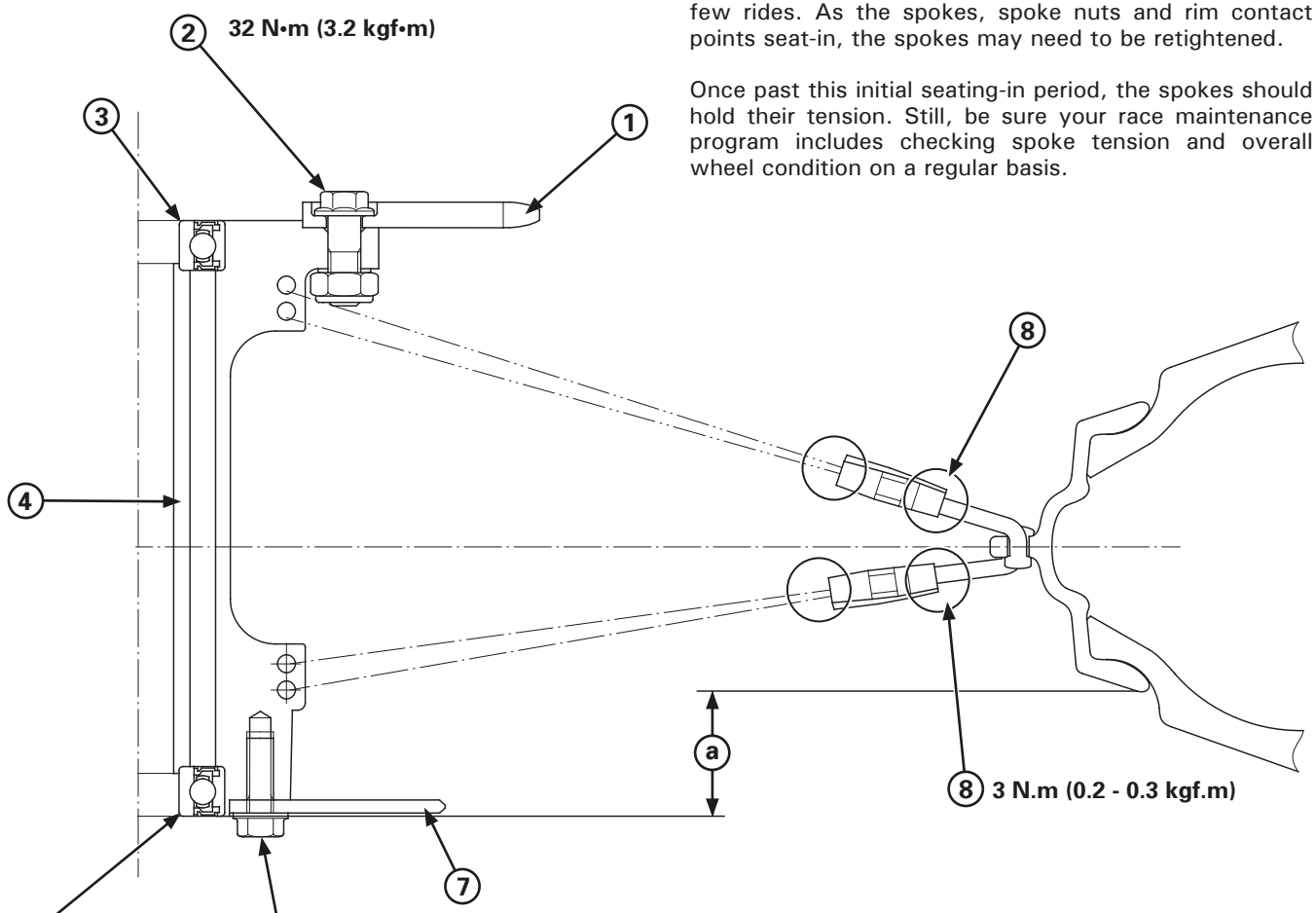

Spokes: Check spoke tension frequently between the first few rides. As the spokes, spoke nuts and rim contact points seat-in, the spokes may need to be retightened.

Once past this initial seating-in period, the spokes should hold their tension. Still, be sure your race maintenance program includes checking spoke tension and overall wheel condition on a regular basis.

(1) DRIVEN SPROCKET
(2) DRIVEN SPROCKET BOLT/NUT
(3) LEFT WHEEL BEARING
(4) DISTANCE COLLAR
(5) RIGHT WHEEL BEARING
(6) DISC BOLT
(7) BRAKE DISC
(8) REAR WHEEL NIPPLE

(a) 30 ± 0.5 mm

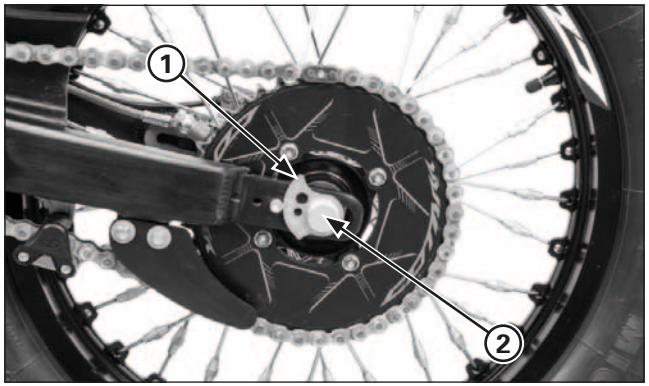

(1) AXLE
(2) ADJUSTERS

Installation

Install the rear brake caliper aligning with the caliper slide rail.

Apply thin layer of grease to the axle.

Place the rear wheel between the swingarm being careful not to damage the disc.
Insert the rear axle into the left chain adjuster, side collar and wheel.

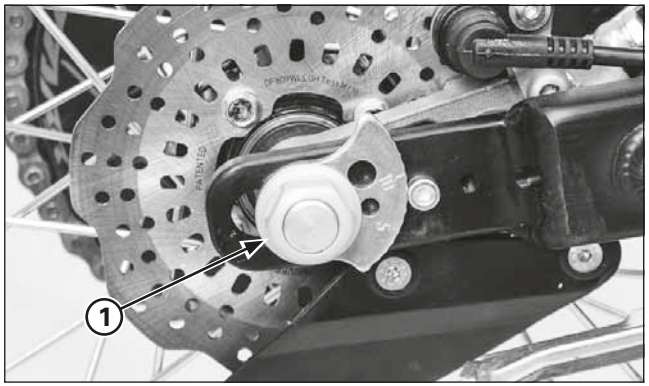

(1) AXLE NUT

Apply grease to the axle nut threads and seating surface.
Install the right chain adjuster and axle nut.

Install the drive chain.
If the master link retaining clip was removed, install the drive chain with the closed end of the clip in the direction of wheel rotation.

Check and adjust the drive chain slack (page 3-11).

Tighten the axle nut.

Torque: 69 N•m (7.0 kgf•m, 51 lbf•ft)

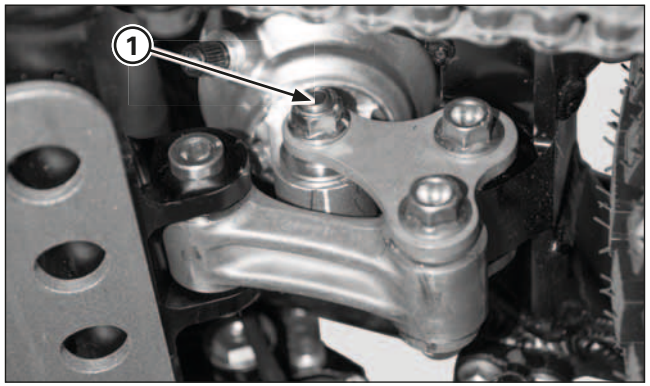

(1) LOWER MOUNTING BOLT/NUT

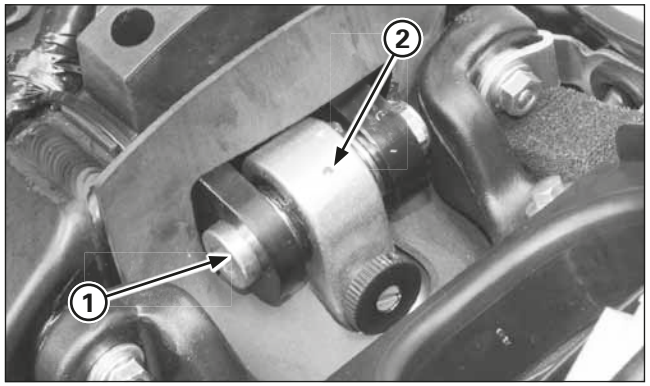

(1) UPPER MOUNTING BOLT/NUT
(2) SHOCK ABSORBER

Shock Absorber

Removal

Remove the air cleaner housing.
Raise the rear wheel off the ground and support it with a block or maintenance stand under the engine.
Remove the shock absorber lower mounting bolt/nut.
Remove the upper mounting bolt/nut and shock absorber.

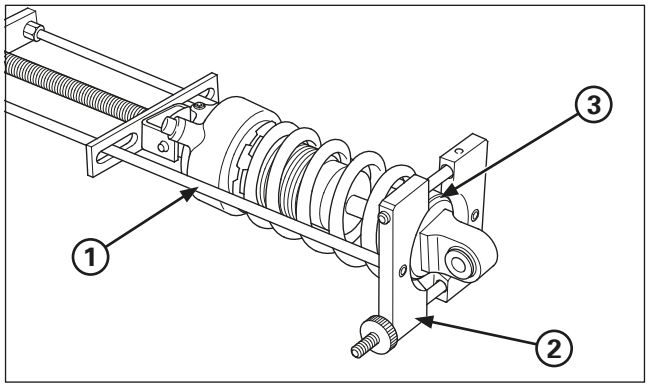

(1) SPRING COMPRESSOR
(2) ATTACHMENT
(3) SPRING SEAT STOPPER

Disassembly

Loosen the spring lock nut and adjuster.
Remove the lower mounting collars.
Set the shock absorber in the shock absorber compressor and attachment.

Tools:
Shock absorber compressor 07GME-0010100
– Compressor attachment 07959–MB10000

Remove the stopper ring, spring seat and spring.

Inspection

Check the following items (specification; page 2-4):
– Upper and lower spherical bearing for wear or damage
– Spring for damage and measure the free length
– Damper for oil leakage from the damper rod
– Nitrogen pressure

Replace the damper unit if an oil leak is detected.

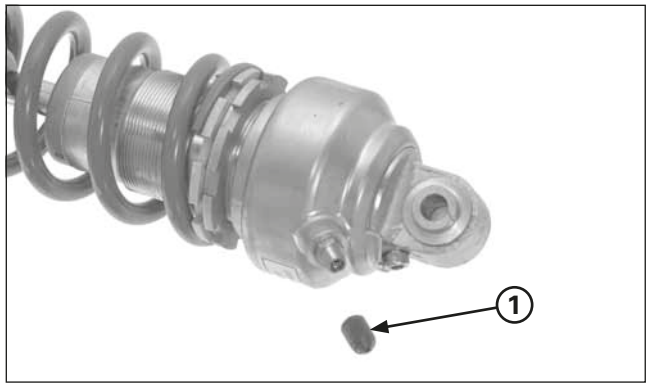

(1) VALVE CAP

Nitrogen Releasing Procedure
Remove the air valve cap and press the valve stem and release the nitrogen from the damper until pressure is released.

Before disposal of the shock absorber, release the nitrogen from the damper.
Wear adequate eye protection.
Point the valve away from you to prevent debris getting into your eyes.

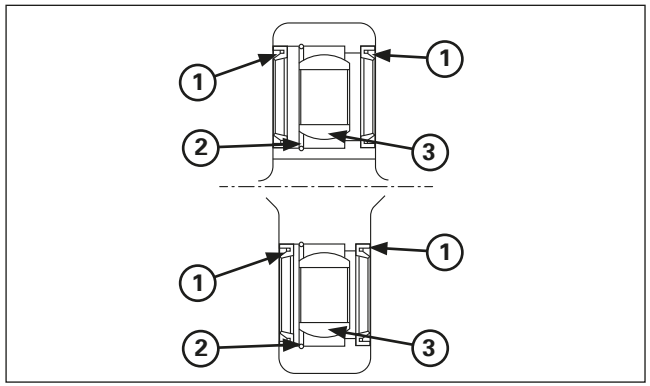

(1) DUST SEALS
(2) STOP RING
(3) SPHERICAL BEARING

Spherical Bearing Replacement

Remove the collars and dust seals.
Check the spherical bearing for smooth rotation or damage.

Remove the stop ring
Press the spherical bearing out using the special tool.

Tool:
Spherical bearing driver 07HMF-KS60100

Press a new spherical bearing into the shock absorber pivot until its seats using same tool.
Install the new stop ring into the groove.

Apply grease to the dust seal lips.
Install the dust seals and collars.

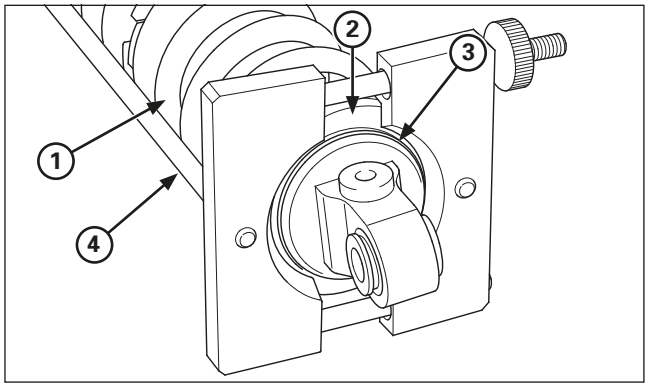

(1) SPRING
(2) SPRING SEAT
(3) STOPPER RING
(4) COMPRESSOR

Assembly

Assembly is in the reverse order of disassembly.

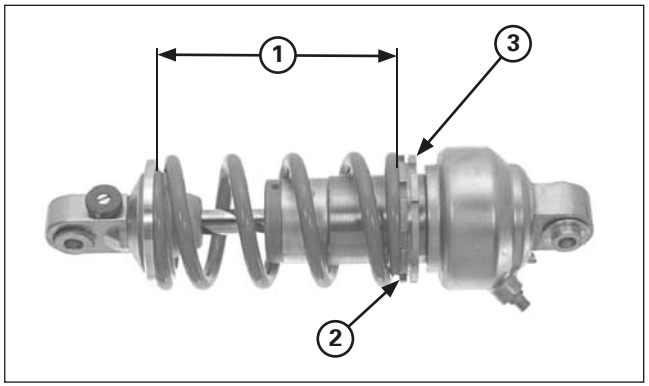

(1) PRE-LOAD LENGTH
(2) ADJUSTER
(3) LOCK NUT

Adjust the spring pre-load length (page 2-4).
Hold the spring adjuster and tighten the lock nut to the specified torque.

Torque: 49 N•m (5,0 kgf•m)

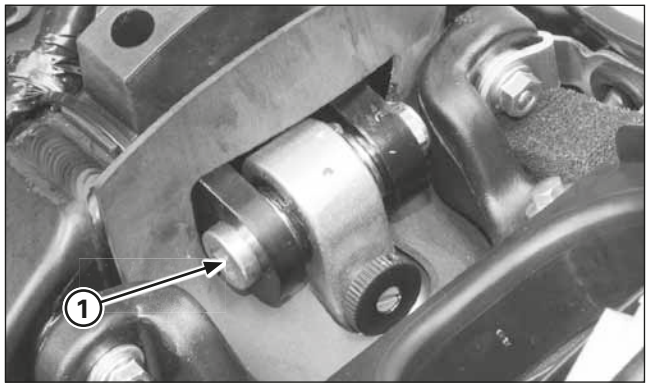

(1) UPPER MOUNTING BOLT/NUT

Installation

Set the shock absorber into the frame and install the upper mounting bolt from the left side.
Install the nut.

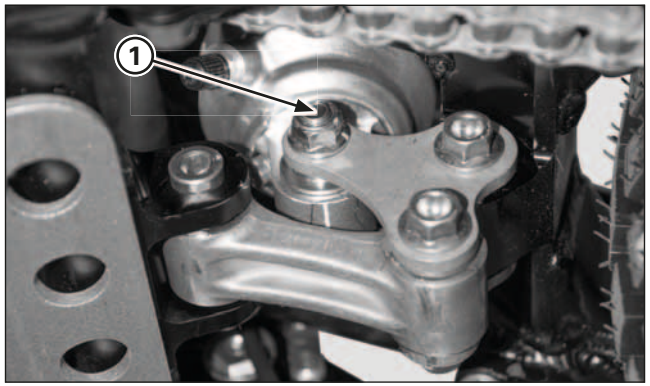

(1) LOWER MOUNTING BOLT/NUT

Move the swingarm aligning the lower mount, then install the lower mounting bolt from the right side.

Install and tighten the upper and lower mounting nuts to the specified torque.

Torque:
Upper mounting bolt: 39 N•m (4.0 kgf•m, 29 lbf•ft)
Lower mounting bolt: 39 N•m (4.0 kgf•m, 29 lbf•ft)

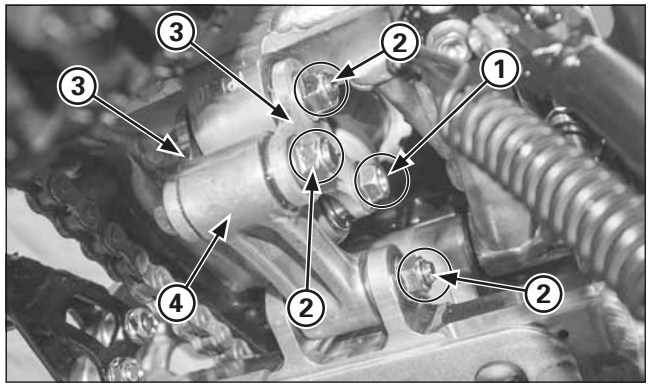

(1) LOWER MOUNTING BOLT/NUT
(2) BOLTS/NUTS
(3) CUSHION ARM PLATES
(4) CUSHION LINK

Shock Linkage

Removal

Raise the rear wheel off the ground with a block or maintenance stand under the engine.

Remove the following:
- Rear cushion lower mounting bolt/nut
- Cushion arm plate-to-cushion link bolt/nut
- Cushion arm plates-to-swingarm bolt/nut
- Cushion arm plates
- Cushion link-to-frame socket bolt/nut
- Cushion link

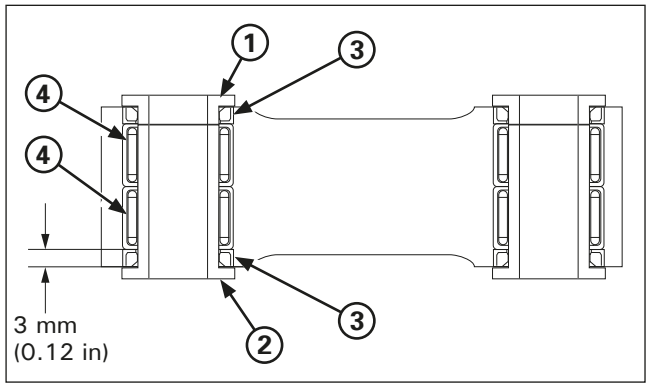

(1) PIVOT COLLAR A
(2) PIVOT COLLAR B
(3) DUST SEALS
(4) NEEDLE BEARINGS

Needle Bearing Replacement

Remove the pivot collars and dust seals.
Check the cushion link needle bearings for damage.

Remove the cushion link needle bearings using the special tool.

Tool:
Bearing driver 07946-MJ0A100

Press new needle bearings into the cushion link to 3 mm (0.12 in) below the surface of the cushion link using the special tool, on both sides.
Face the bearing with its marked side facing out.

Tool:
Bearing driver 07946-MJ0A100

Apply multi-purpose grease to the collars and dust seal lips.
Install the dust seals and pivot collars.

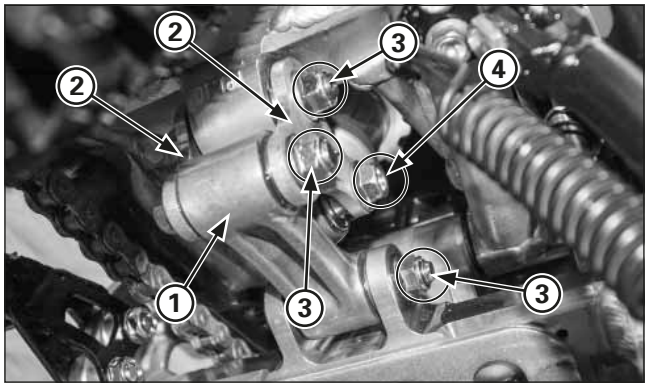

(1) CUSHION LINK
(2) CUSHION ARM PLATES
(3) BOLTS/NUTS
(4) LOWER MOUNTING BOLT/NUT

Installation

Install the following:
– Cushion link
– Cushion link-to-frame socket bolt/nut
– Cushion arm plates
– Cushion arm plates-to-swingarm bolt/nut
– Cushion arm plate-to-cushion link bolt/nut
– Rear cushion lower mounting bolt/nut

Tighten the cushion arm plate and cushion link nuts to the specified torque.

Torque: 39 N•m (4.0 kgf•m, 29 lbf•ft)

Tighten the rear cushion lower mounting nut to the specified torque.

Torque: 39 N•m (4.0 kgf•m, 29 lbf•ft)

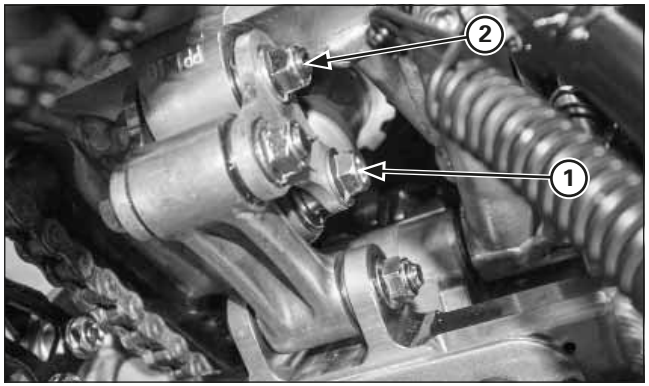

(1) SHOCK ABSORBER LOWER MOUNTING BOLT/NUT
(2) SHOCK ARM PLATES-TO-SWINGARM BOLT/NUT

Swingarm

Removal

Remove the following:
– Rear wheel (page 5-15)
– Shock absorber lower mounting bolt/nut
– Cushion arm plates-to-swingarm bolt/nut

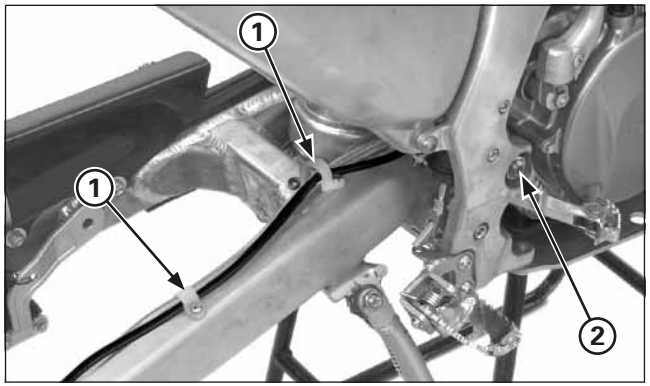

(1) BRAKE HOSE CLAMPS
(2) SWINGARM PIVOT BOLT/NUT

Remove the following:
– Brake hose clamps screws
– Rear brake caliper
– Swingarm pivot bolt/nut and swingarm assembly

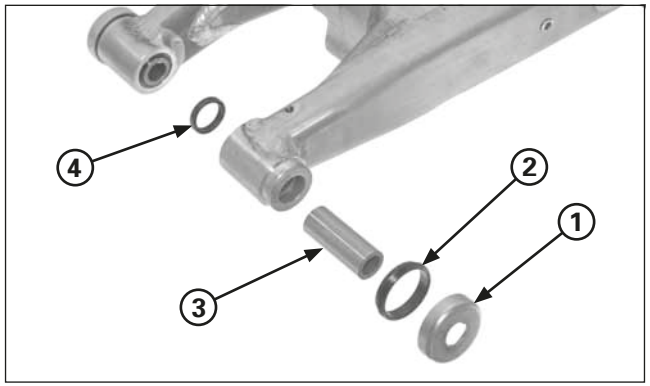

(1) DUST SEAL CAP
(2) DUST SEAL
(3) PIVOT COLLAR
(4) DUST SEAL

Disassembly

Remove the following:
- Bolts and drive chain cover
- Bolts and driven sprocket guard
- Screws and drive chain slider
- Chain tensioner
- Dust seal caps
- Dust seals
- Pivot collars
- Thrust bushings

Replace them if they have score marks, scratches, excessive or abnormal wear.
Check the shock mounts and swingarm for stress, cracks or other damage.

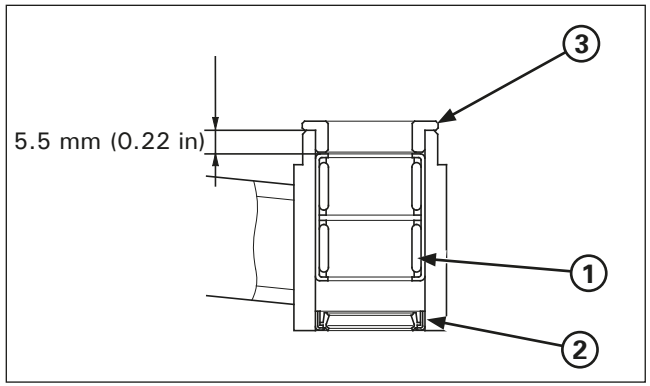

(1) NEEDLE BEARING
(2) DUST SEAL
(3) BUSHING

Pivot Bearing Replacement

Replace the swingarm bearings as a set.

Remove the pivot bearings using the special tool.

Tool:

Bearing driver	**07946-KA50000**

Press a new pivot bearing in using the special tools .

Tools:

Driver	**07749-0010000**
Attachment, 24 x 26 mm	**07746-0010700**
Pilot, 20 mm	**07746-0040500**

Face the bearing with its marked side facing out.
Press the needle bearing so that it is 5.5 mm (0.22 in) below the swingarm end.

Install the thrust bushings and the dust seal.

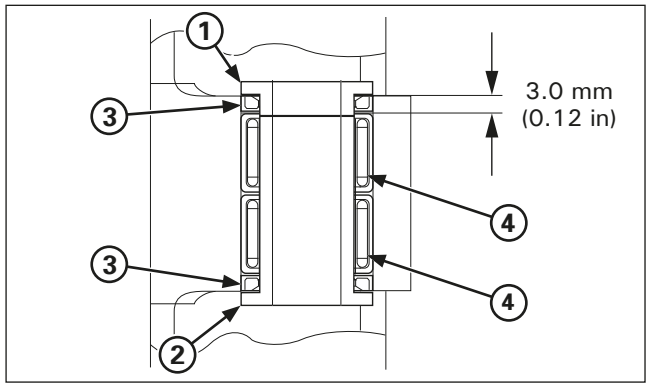

(1) PIVOT COLLAR A
(2) PIVOT COLLAR B
(3) DUST SEALS
(4) NEEDLE BEARINGS

Link Bearing Replacement

Remove the pivot collars and dust seals.
Remove the pivot bearings using the special tool.

Tool:

Bearing driver	**07946-MJ0A100**

Press a new pivot bearing in using the special tools .

Tool:

Bearing driver	**07946-MJ0A100**

Face the bearing with its marked side facing out.
Press the needle bearing so that it is 3.0 mm (0.12 in) below the swingarm end.

Install the dust seals and pivot collars.

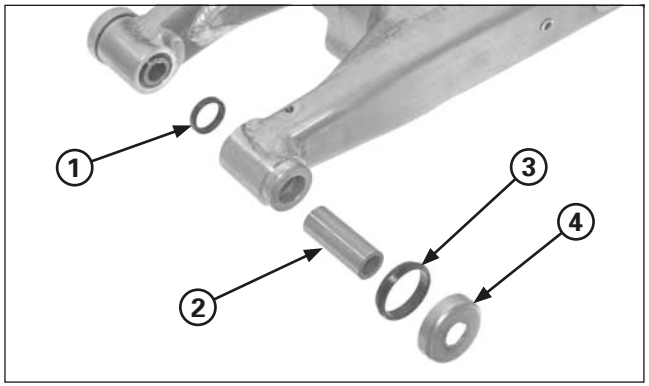

(1) DUST SEAL
(2) PIVOT COLLAR
(3) DUST SEAL
(4) DUST SEAL CAP

Assembly

Apply grease to the bearings, pivot collars and lips of a new dust seals.

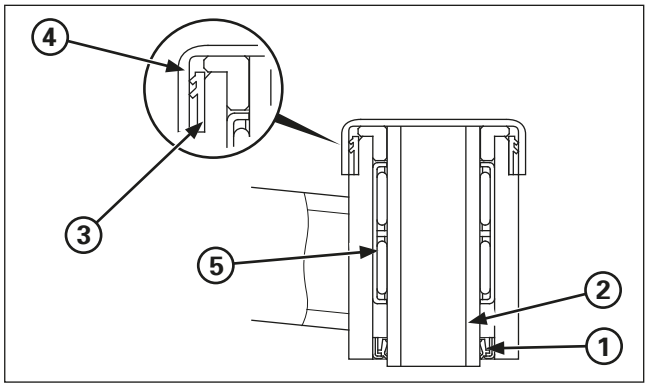

(1) DUST SEAL
(2) PIVOT COLLAR
(3) DUST SEAL
(4) DUST SEAL CAP
(5) NEEDLE BEARING

Install the pivot collars, dust seals and dust seal caps. Note the direction of the dust seal.

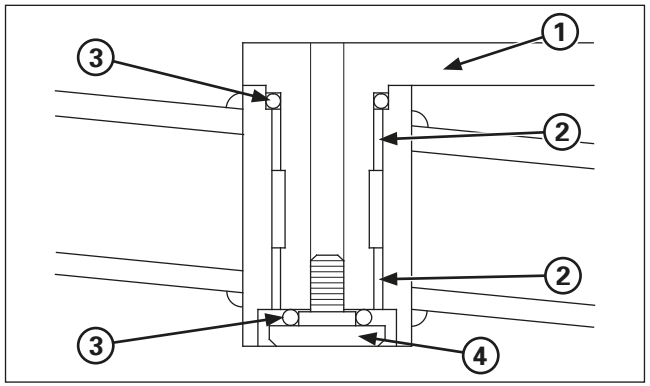

(1) CHAIN TENSIONER
(2) BUSHINGS
(3) O-RINGS
(4) PIVOT BOLT

Apply grease to the pivot chain tensioner, bushings and O-rings.

Install the drive chain tensioner pivot bushings into the swingarm.
Install a new O-ring onto the chain tensioner pivot.
Install the chain tensioner into the swingarm.
Install a new O-ring and tighten the pivot bolt.

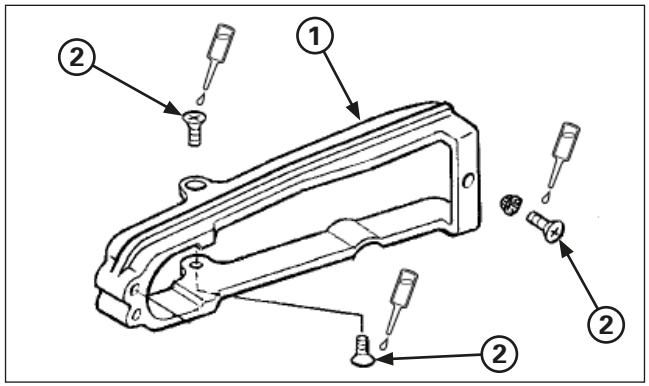

(1) DRIVE CHAIN SLIDER
(2) SCREWS

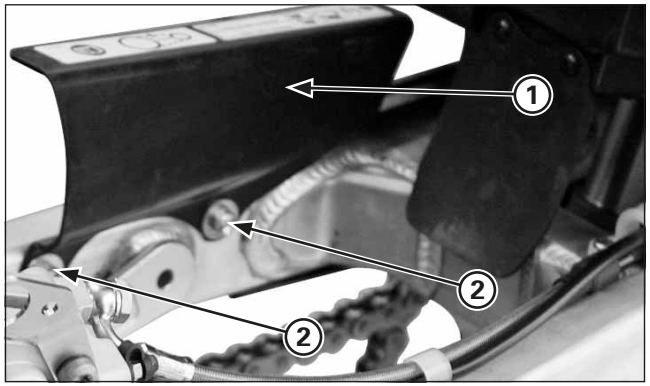

(1) DRIVE CHAIN GUARD
(2) SCREWS

Install the drive chain sliders onto the swingarm.
Apply a locking agent to the drive chain slider screw threads and tighten the screw.

Install the drive chain guard and tighten the bolts.

Torque: 6 - 7 N•m (0,6 - 0,7 kgf•m, 4,5 - 5,1 lbf•ft)

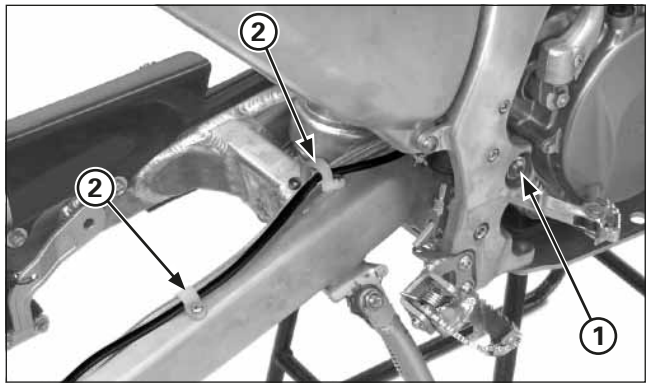

(1) PIVOT BOLT/NUT
(2) HOSE CLAMPS

Installation

Apply thin coat of grease to the swingarm pivot bolt surface.
Install the swingarm into the frame.
Install the swingarm pivot bolt from the left side.
Install and tighten the swingarm pivot nut to the specified torque.

Torque: 69 N•m (7.0 kgf•m, 51 lbf•ft)

Install the brake caliper onto the swingarm rail.
Install the brake hose clamps and tighten the screws.

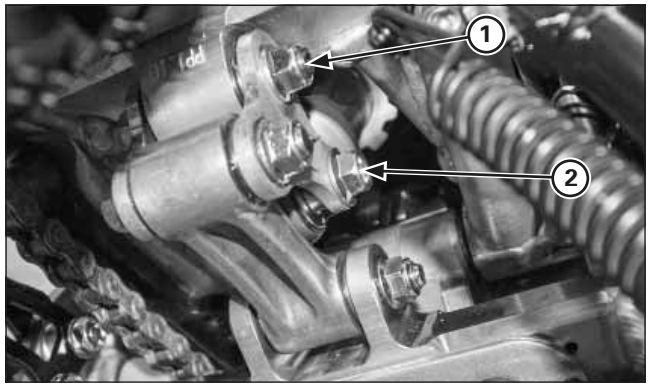

(1) SHOCK ARM PLATES-TO-SWINGARM BOLT/NUT
(2) SHOCK ABSORBER LOWER MOUNTING BOLT/NUT

Install the following:
– Shock arm plates-to-swingarm bolt/nut
– Rear cushion lower mounting bolt/nut

Tighten the shock arm plate bolt.

Torque: 39 N•m (4.0 kgf•m, 29 lbf•ft)

Tighten the shock absorber lower mounting bolt to the specified torque.

Torque: 39 N•m (4.0 kgf•m, 29 lbf•ft)

Install the rear wheel (page 5-16)

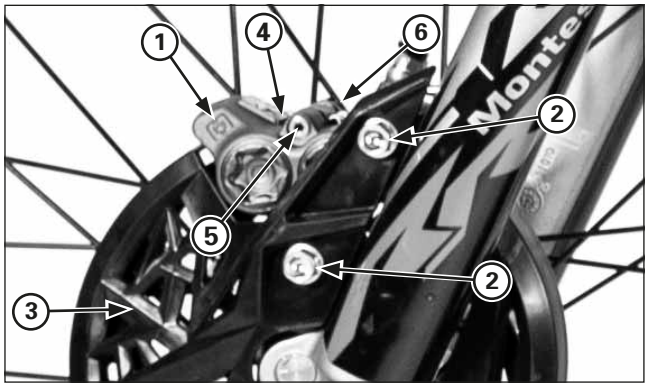

(1) PAD SPRING PIN
(2) BOLTS
(3) DISC COVER
(4) CALIPER
(5) PIN
(6) CIRCLIP

Front Brake Pad Replacement

Clean the brake disc with a high quality degreasing agent if they are contaminated with oil or grease.
Replace the pads if they are contaminated.

Remove the brake caliper mounting bolts, disc cover, flange collars and caliper.
Remove the circlip.
Remove the pad pin.
Remove the spring from the pads.

Push the pistons all the way in to allow installation of new brake pads.
Check the brake fluid level in the reservoir as this operation causes the level to rise.

Remove the brake pads.

Clean the brake caliper inside especially around the caliper pistons.

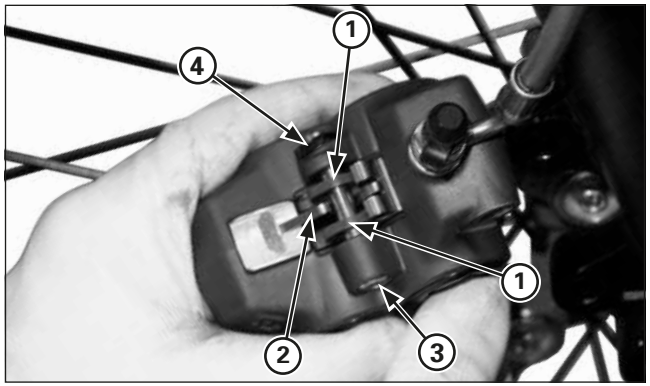

(1) NEW PADS
(2) PAD SPRING
(3) PIN
(4) CIRCLIP

Install the new pads, the spring from the pads and secure with the pad pin and the circlip.

Torque: 8 N•m (0.8 kgf•m, 5.9 lbf•ft)

Install the caliper to the fork so the disc is positioned between the pads, being careful not to damage the pads.
Apply a locking agent to the caliper mounting bolt threads.
Install the disc cover, then install and tighten the mounting bolts.

Torque: 26 N•m (2.7 kgf•m, 20 lbf•ft)

Operate the brake lever to seat the caliper pistons against the pads.

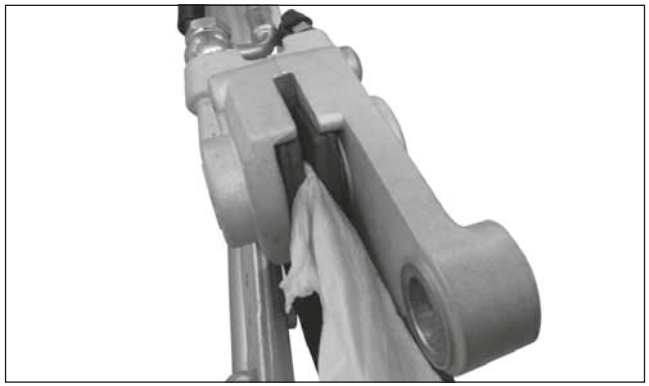

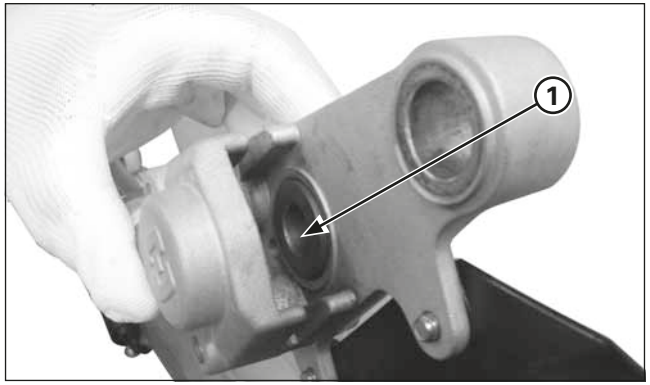

(1) CALIPER PISTON

Rear Brake Pad Replacement

Clean the brake disc with a high quality degreasing agent if they are contaminated with oil or grease.
Replace the pads if they are contaminated.

Remove the rear wheel (page 5-15)
Push the piston all the way in to allow installation of new brake pads.
Check the brake fluid level in the reservoir as this operation causes the level to rise.
Remove the pad pin and brake pads.
Clean the brake caliper inside especially around the caliper pistons.

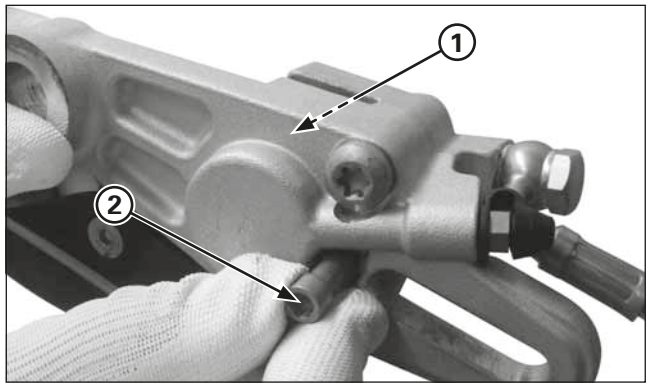

(1) BRAKE PADS
(2) PAD PIN

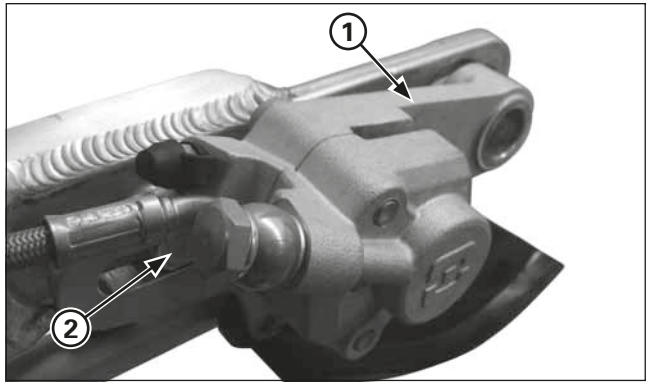

(1) CALIPER BRACKET
(2) BOSS/SLIT

Install the new pads and secure them with the pad pin.

Install the brake caliper bracket aligning its slit with the boss on the swingarm.

Install the rear wheel (page 5-16).
Operate the brake pedal to seat the caliper pistons against the pads.

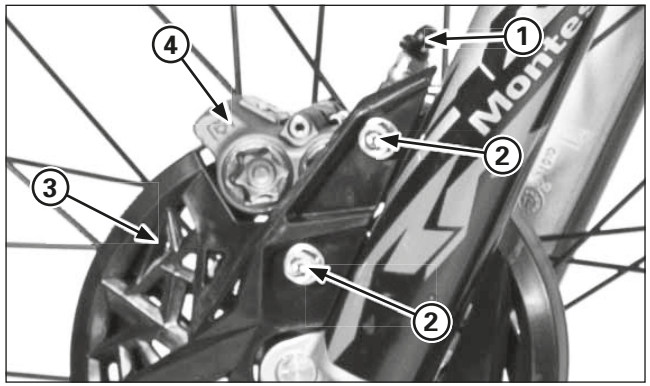

(1) BRAKE HOSE OIL BOLT
(2) MOUNTING BOLTS
(3) DISC COVER
(4) BRAKE CALIPER

Front brake caliper

Removal

NOTICE

Avoid spilling brake fluid on painted, plastic or rubber parts.
Place a shop rag over these parts whenever the system is serviced.

Drain the brake system.
Place a clean container under the caliper.

Remove the following:
- Brake hose oil bolt
- Sealing washers
- Brake hose eyelet
- Caliper mounting bolts
- Disc cover
- Flange collars
- Brake caliper
- Spring pin for the pads
- Brake pads (page 5-25)

Inspection

Clean the inside of the caliper.
Check the oil leakage from the caliper cylinders.

If any part of the caliper is damaged, replace the caliper as an assembly.

Installation

Apply locking agent to the caliper mounting bolt threads.
Install the brake caliper and disc cover, and then install and tighten the caliper mounting bolts.

Torque: 26 N•m (2.7 kgf•m, 20 lbf•ft)

Connect the brake hose with two new sealing washers, then tighten the oil bolt.

Torque: 20 N•m (2.0 kgf•m, 14.6 lbf•ft)

Bleed the air in the front brake system.

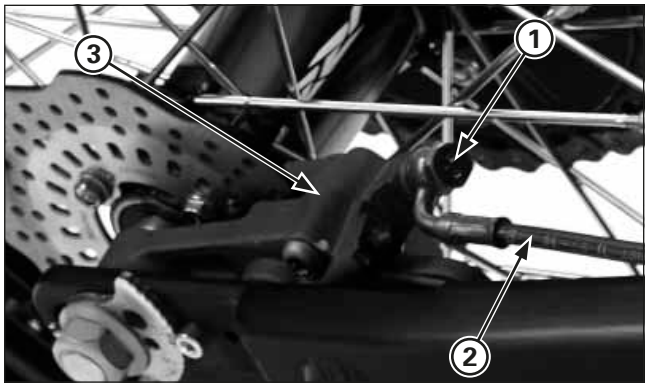

(1) OIL BOLT
(2) BRAKE HOSE
(3) BRAKE CALIPER

Rear brake caliper

Removal

NOTICE

Avoid spilling brake fluid on painted, plastic or rubber parts.
Place a shop rag over these parts whenever the system is serviced.

Drain the brake system.
Place a clean container under the caliper.

Remove the following:
- Brake hose oil bolt
- Sealing washers
- Brake hose eyelet
- Rear wheel (page 5-15)
- Brake caliper/bracket
- Spring pin for the pads
- Brake pads (page 5-25)

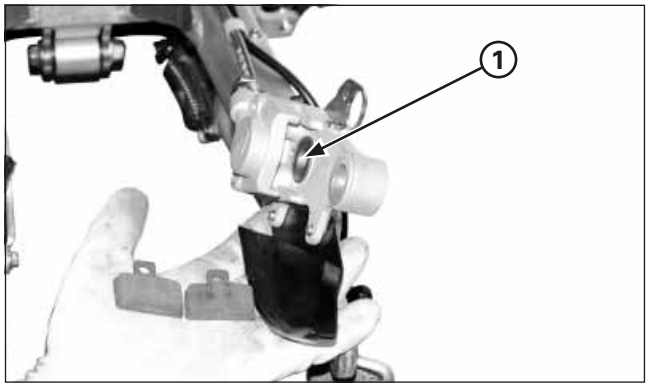

(1) CALIPER PISTON

Inspection

Clean the inside of the caliper.
Check the oil leakage from the caliper cylinder.

If any part of the caliper is damaged, replace the caliper as an assembly.

Installation

Install the brake caliper onto the swingarm rail.
Connect the brake hose with two new sealing washers.

Install the rear wheel (page 5-16).

Tighten the oil bolt to the specified torque.

Torque: 26 N•m (2.7 kgf•m, 20 lbf•ft)

Bleed the air in the rear brake system.

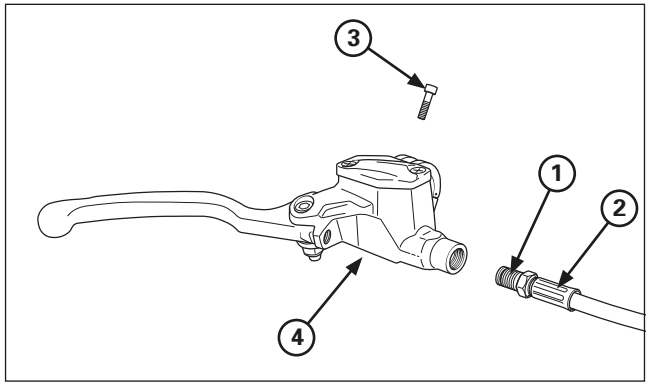

(1) OIL BOLT
(2) BRAKE HOSE
(3) BOLT
(4) MASTER CYLINDER

Front master cylinder

Removal/Installation

NOTICE

- *Avoid spilling brake fluid on painted, plastic or rubber parts. Place a shop rag over these parts whenever the system is serviced.*
- *When removing the brake hose bolt, cover the end of the hoses to prevent contamination. Secure the hoses to prevent fluid from leaking out.*
-

Drain the brake fluid from the hydraulic system into a suitable container.

Remove the following:
– Brake lever
– Brake hose bolt
– Master cylinder holder bolts and holder
– Master cylinder

(1) BOOT
(2) SNAP RING
(3) PISTON ASSEMBLY
(4) SPRING
(5) OIL SEAL
(6) CIRCLIP

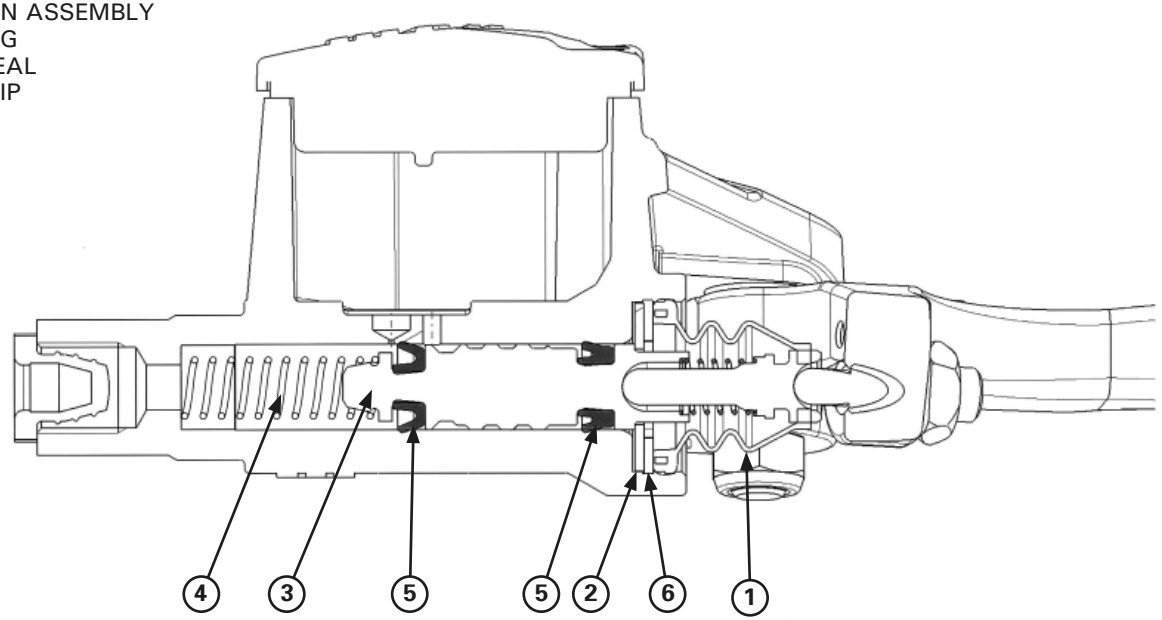

Disassembly/Assembly

NOTICE

- *Keep the master cylinder piston, cups, spring and snap ring as a set; don't substitute individual parts.*
- *When installing the cups, do not allow the lips to turn inside out and be certain the snap ring is firmly seating in the groove.*

Remove the snap ring and disassemble the master cylinder.

Tool:
Snap ring pliers 07914-SA50001

Inspection

Check the following items (page 2-4):
– Master cylinder and piston for scoring, scratches or other damage
– Master piston O.D. and master cylinder I.D.

Installation

Installation is in the reverse order of removal.

Torque:
Brake hose oil bolt:
14 N•m (1.4 kgf•m, 10.3 lbf•ft)
Master cylinder holder bolt:
5.5.N•m (0.5 kgf•m, 4.1 lbf•ft)

Bleed the air in the front brake system.

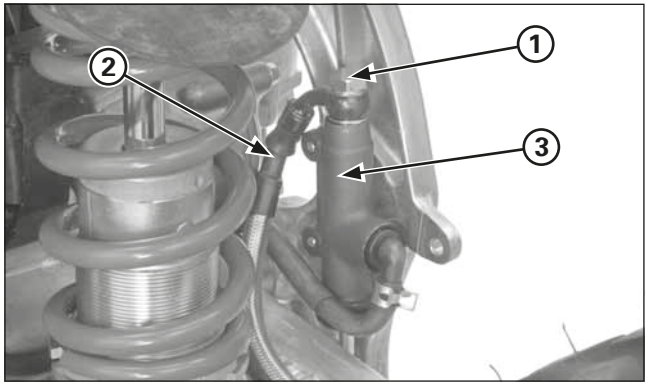

(1) OIL BOLT
(2) BRAKE HOSE
(3) MASTER CYLINDER

Rear master cylinder

Removal/Installation

NOTICE

- *Avoid spilling brake fluid on painted, plastic or rubber parts. Place a shop rag over these parts whenever the system is serviced.*
- *When removing the brake hose bolt, cover the end of the hoses to prevent contamination. Secure the hoses to prevent fluid from leaking out.*

Drain the brake fluid from the hydraulic system into a suitable container.

Remove the air cleaner housing.
Remove the exhaust muffler.
Remove the reservoir tank from the bracket.

Remove the brake hose oil bolt and disconnect the brake hose.

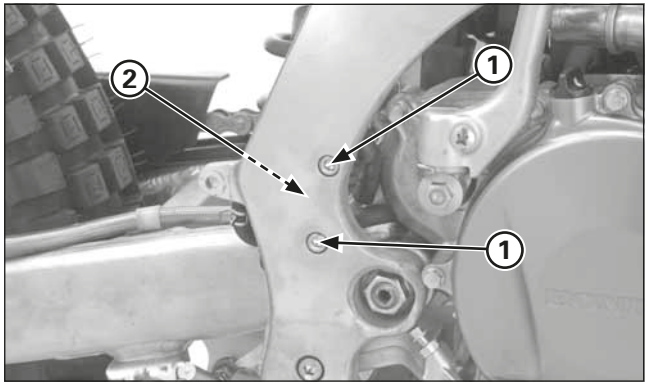

(1) BOLTS
(2) MASTER CYLINDER

Remove the mounting bolts and master cylinder.

Installation

Installation is in the reverse order of removal.
Connect the brake hose with two new sealing washers, then tighten the oil bolt.

Torque:
Brake hose oil bolt: 26 N•m (2.7 kgf•m, 19.1 lbf•ft)

Bleed the air from the rear brake system.

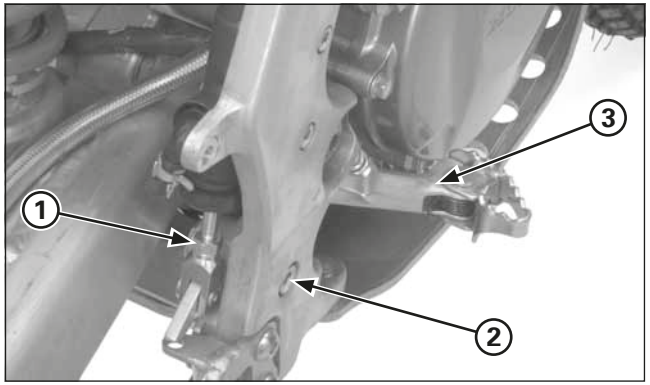

(1) NUT
(2) BOLT
(3) BRAKE PEDAL

Brake pedal

Removal

Remove the brake pedal pivot nut and bolt.
Remove the brake pedal and collar.

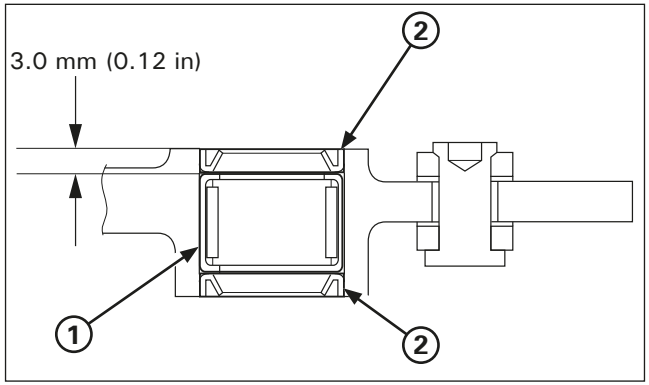

(1) BEARING
(2) DUST SEALS

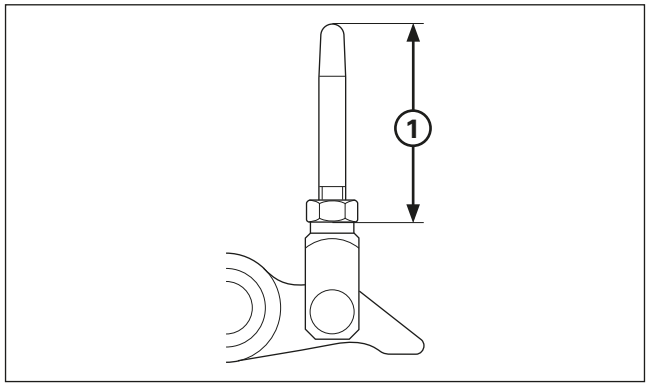

(1) STANDARD LENGTH; 35.0 MM

Pivot Bearing Replacement

Remove the dust seals.
Remove the pivot bearing and press a new needle bearing so that it is 3.0 mm (0.12 in) below the pedal end. Apply grease inside needle bearing.

Adjust the brake pedal height by loosening the lock nut and turning the push rod.
Push rod height must be adjusted between 32.5 – 37.5 mm.

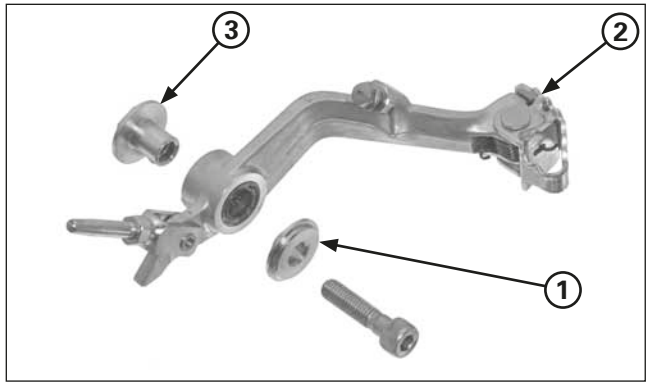

(1) COLLAR B
(2) PEDAL
(3) COLLAR A

Installation

Install the brake pedal and collars.
Install and tighten the pivot nut and bolt.

Torque: 29 N•m (3.0 kgf•m, 22 lbf•ft)

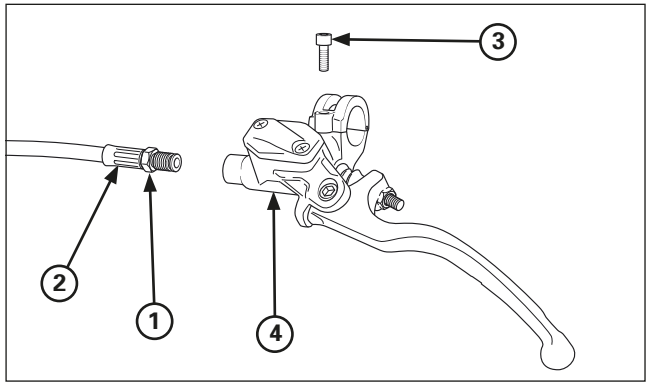

(1) OIL BOLT
(2) CLUTCH HOSE
(3) BOLT
(4) MASTER CYLINDER

Clutch master cylinder

Removal/Installation

NOTICE

- *Avoid spilling brake fluid on painted, plastic or rubber parts. Place a shop rag over these parts whenever the system is serviced.*
- *When removing the clutch hose bolt, cover the end of the hose to prevent contamination. Secure the hose to prevent fluid from leaking out.*

Drain the clutch fluid from the hydraulic system into a suitable container.

Remove the following:
– Clutch lever
– Clutch hose bolt
– Master cylinder holder bolt and holder
– Master cylinder

(1) BOOT
(2) SNAP RING
(3) PISTON ASSEMBLY
(4) SPRING
(5) OIL SEAL
(6) CIRCLIP

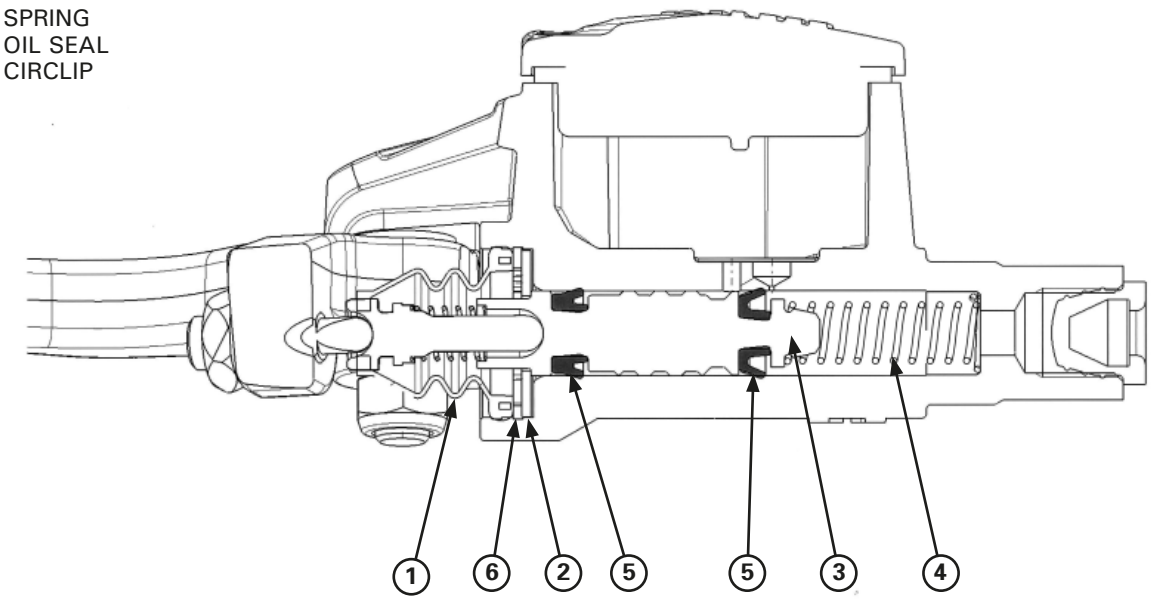

Disassembly/Assembly

NOTICE

- *Keep the master cylinder piston, cups, spring and snap ring as a set; don't substitute individual parts.*
- *When installing the cups, do not allow the lips to turn inside out and be certain the snap ring is firmly seating in the groove.*

Remove the snap ring and disassemble the master cylinder.

Tool:

Snap ring pliers	**07914-SA50001**

Inspection

Check the following items (page 2-3):
– Master cylinder and piston for scoring, scratches or other damage
– Master piston O.D. and master cylinder I.D.

Installation

Installation is in the reverse order of removal.

Torque:
Brake hose oil bolt: 14 N•m (1.4 kgf•m, 10.3 lbf•ft)
Master cylinder holder bolt: 5.5 N•m (0.5 kgf•m, 4.1 lbf•ft)

Bleed the air from the clutch system.

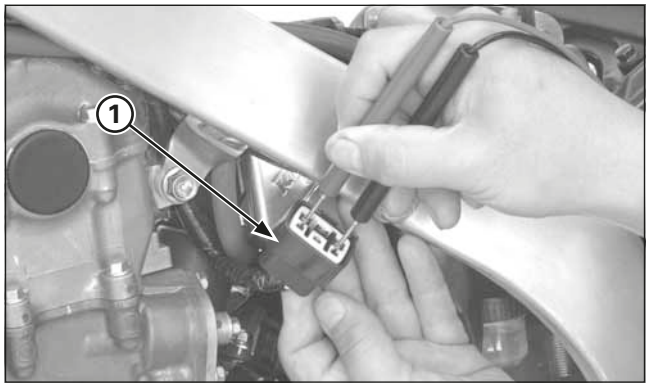

(1) 6P (BLACK) CONNECTOR

Charging system inspection

Alternator charging coil

Disconnect the regulator rectifier 6P (Black) connector.
Measure the resistance between the Yellow terminals of the wire harness side.

Standard: 0.7 – 1.0 Ω (20˚C/68˚F)

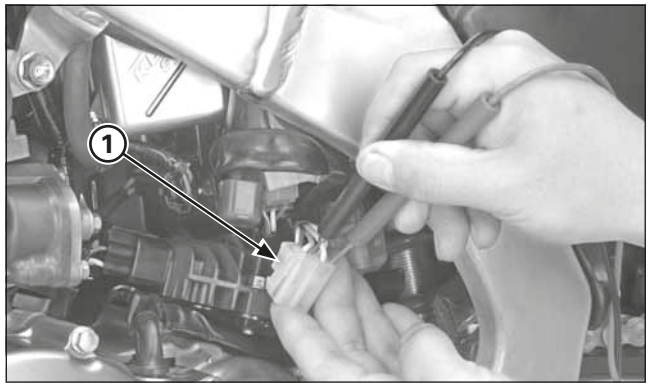

(1) 3P (NATURAL) CONNECTOR

If the resistance is out of specification, disconnect the alternator 3P (Natural) connector and measure the resistance between the yellow terminals of the alternator side connector.

If the measured resistance at regulator/rectifier 6P (Black) connector is incorrect and the alternator 3P (Natural) connector is correct, check the wire harness.
If the resistance is still out of specification, replace the stator assembly.

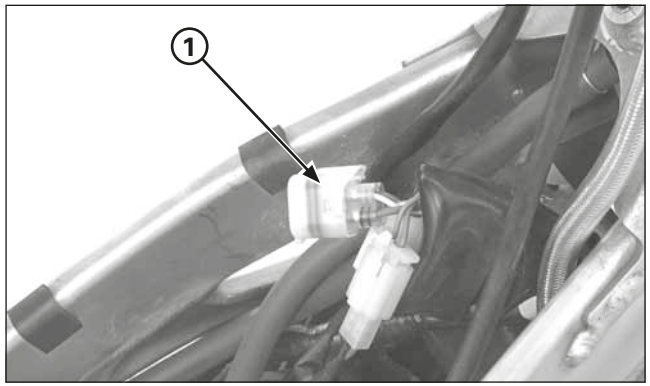

(1) 4P (NATURAL) CONNECTOR

Regulated Voltage Inspection

Disconnect the power 4P (Natural) connector.
Connect the digital voltmeter to the Red (+) and Green (–) terminals.
Start the engine, check for regulated voltage.

Standard: 13.5 – 14.5 V/1,800 rpm

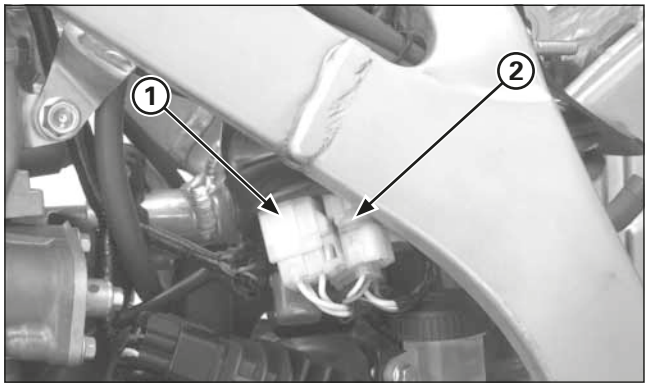

(1) 3P (NATURAL) CONNECTOR
(2) 2P (NATURAL) CONNECTOR

Regulator/Rectifier Removal/installation

Remove the throttle body (page 4-13).

Disconnect the alternator 3P (Natural) connector and ignition pulse generator 2P (Natural) connector.

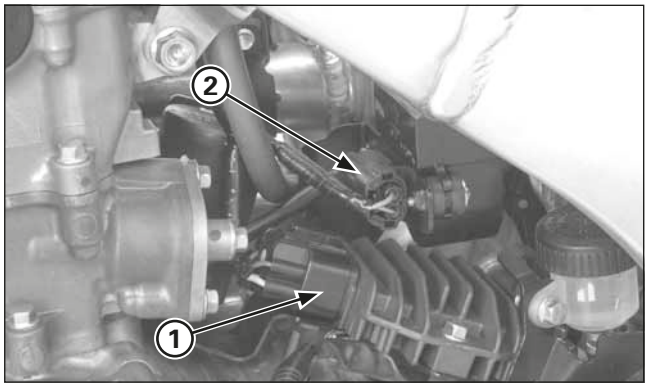

(1) 2P (BLACK) CONNECTOR
(2) 6P (BLACK) CONNECTOR

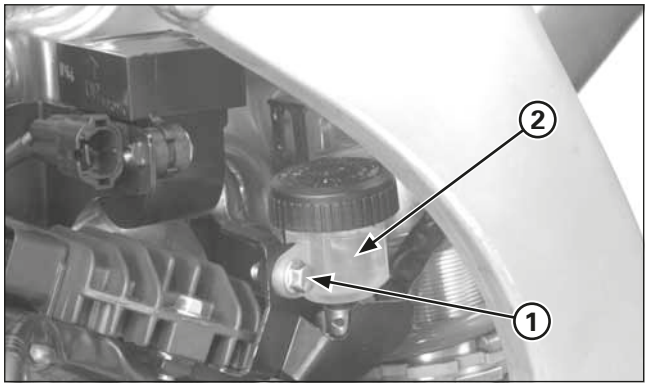

(1) BOLT
(2) BRAKE RESERVOIR

Disconnect the condenser 2P (Black) and regulator/rectifier 6P (Black) connectors.

Remove the rear brake reservoir tank mounting bolt.

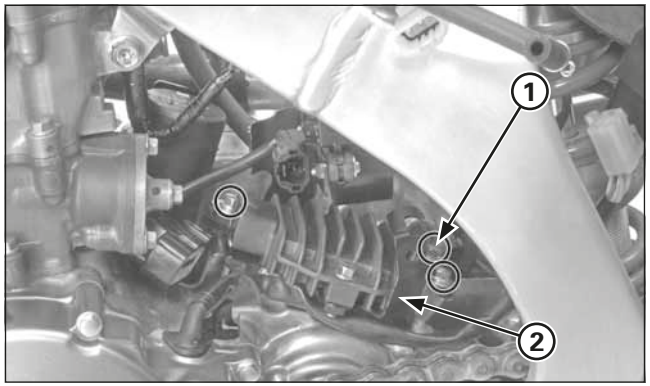

(1) BOLTS
(2) ELECTRIC STAY ASSEMBLY

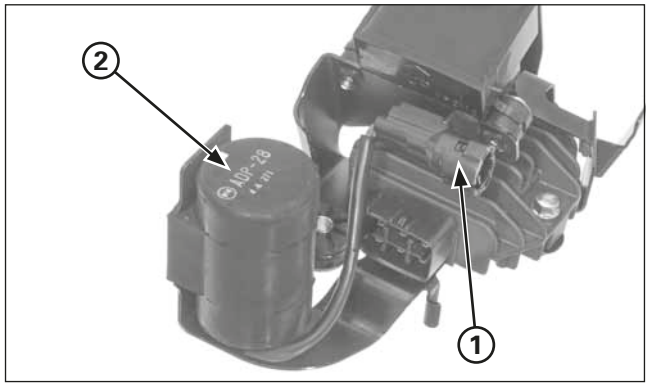

(1) 2P (BLACK) CONNECTOR
(2) CONDENSER

Remove the electric stay mounting bolts, then remove the stay assembly from the frame.

Release the condenser 2P (Black) connector, then remove the condenser from the electric stay.

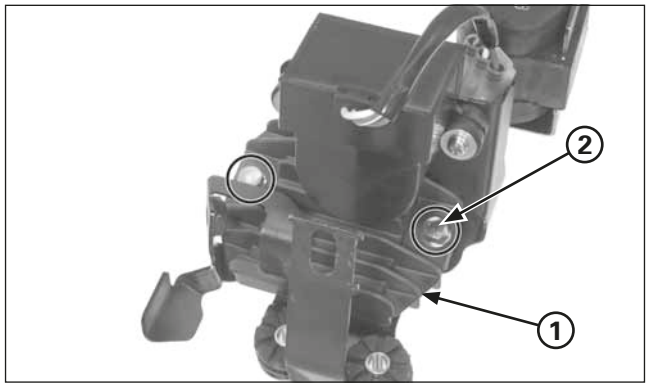

(1) BOLTS
(2) REGULATOR/RECTIFIER

Remove the bolts and regulator/rectifier from the electric stay.

Install the regulator/rectifier and condenser in the reverse order of removal.

Install the rest of the components in the reverse order of disassembly.

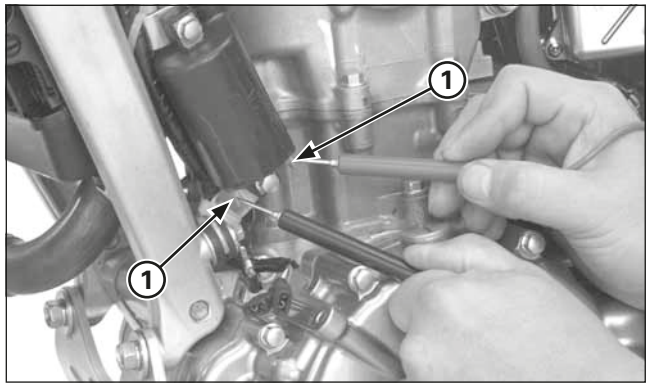

(1) PRIMARY TERMINALS

Ignition system inspection

Ignition coil inspection

Measure the ignition primary coil resistance between the primary terminals.

Standard: 2.6 - 3.2 Ω (20˚C/68˚F)

Measure the secondary coil resistance.

Standard:
With plug cap: 17.3 - 22.8 kΩ (20˚C/68˚F)
Without plug cap: 13.5 - 16.5 kΩ (20˚C/68˚F)

Replace the ignition coil if the resistance is out of specification.

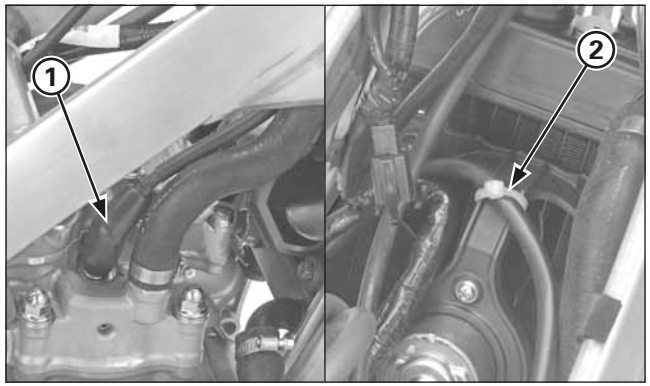

(1) SPARK PLUG CAP
(2) TIE-WRAP

Removal/Installation

Remove the fuel tank/injector assembly.

Remove the spark plug cap.
Remove the tie-wrap and release the spark plug wire from the fan motor bracket.

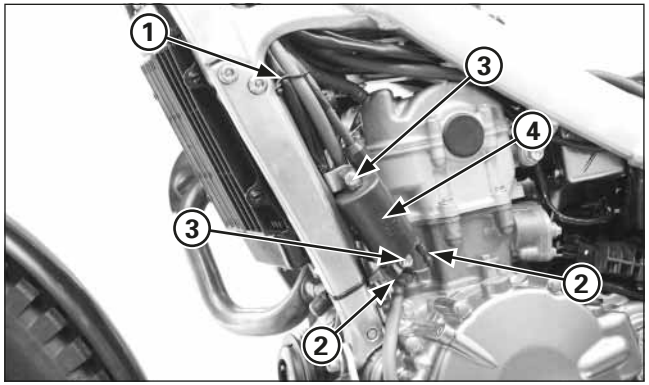

(1) WIRE CLAMP
(2) PRIMARY WIRES
(3) BOLTS
(4) IGNITION COIL

Remove the wire clamp.

Disconnect the primary wire from the ignition coil.
Remove the mounting bolts and ignition coil.

Installation is in the reverse order of removal.
Route the spark plug wire properly and secure it with tie wrap.

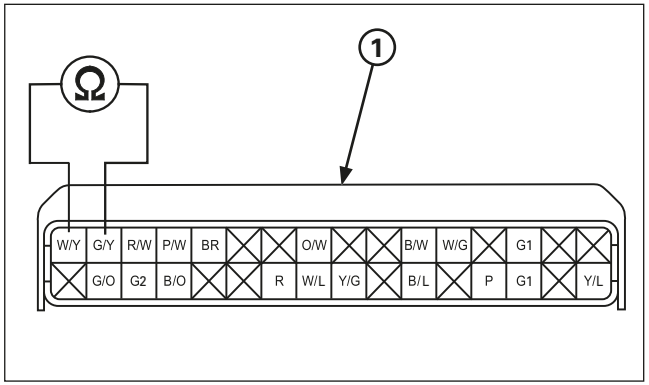

(1) 32P (BLACK) CONNECTOR

Ignition Pulse Generator Inspection

Check the ignition coil resistance at the ECM 32P (Black) connector (page 6-5).

Connection: White/yellow – Green/yellow
Standard: 85 - 115 Ω (20˚C/68˚F)

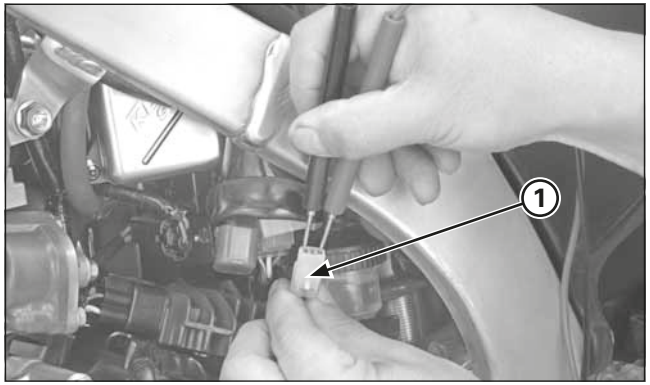

(1) 2P (NATURAL) CONNECTOR

If the resistance is out of specification, measure the resistance at the ignition pulse generator 2P (Natural) connector.

If the measured resistance at ECM 32P (Black) connector is incorrect and the ignition pulse generator 2P (Natural) connector is correct, check the wire harness.
If the resistance is still out of standard, replace the ignition pulse generator/stator assembly (page 4-52)

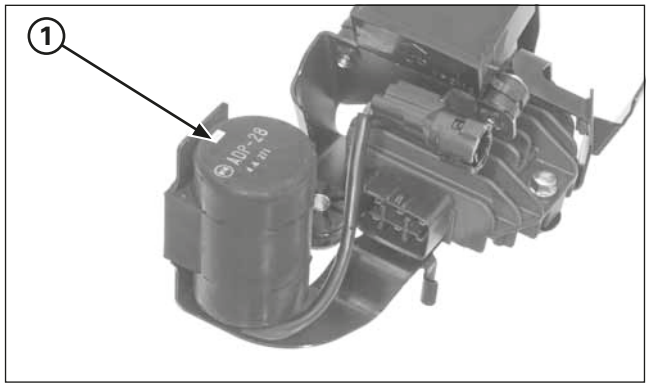

(1) CONDENSER

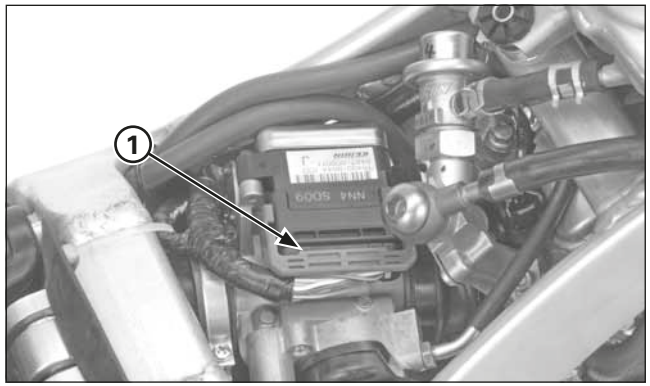

(1) 32P (BLACK) CONNECTOR

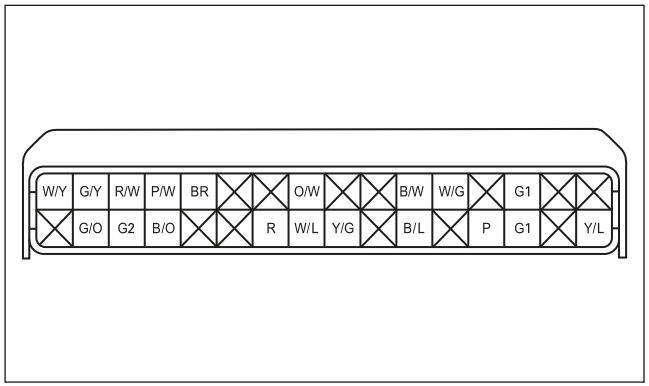

Condenser Inspection

If the engine does not start, check for the items "engine does not start" in the PGM-FI Malfunction Indicator Lamp (MIL) Failure Code chart on page 6-8.

If all items are correct, replace the condenser unit with new one, and inspect again.
If the engine starts, the replaced condenser is faulty.
If the engine does not starts, check for wire harness.

PGM-FI System inspection

Place the motorcycle upright position and remove the rear fender.
Disconnect the ECM 32P (Black) connector.
Check for the following at the ECM terminals of the wire harness side.

Item	Terminal	Standard
Ignition pulse generator	G/Y – W/Y	85 – 115 Ω (20˚C/68˚F)
Ignition coil (primary coil)	Y/L – R	2.6 – 3.2 Ω (20˚C/68˚F)
INJ (Injector)	P – R	11.1 – 12.3 Ω (20˚C/68˚F)
Engine stop switch	B/W – Ground	Continuity exist only when switch is pushed
ECT (Engine Coolant Temperature) sensor	P/W – G/O	2.3 – 2.6 kΩ (20˚C/68˚F)
Sensor ground	G1 – Ground	Continuity
Power ground	G1 – Ground	Continuity

PGM-FI

NOTICE

If the MIL indicator comes on while driving, you may have a problem with the PGM-FI electronic injection system.
Slow down and stop the motorcycle in a safe place.
Re-start the motorcycle.
If the MIL indicator is still on after 5 seconds, inspect the motorcycle at your Montesa dealer as soon as possible.

OBD system (diagnosis system)

This motorcycle complies with the Euro 4 standard and with the OBD diagnosis system phase1. The existing PGM-FI injection system is equipped with a self-diagnosis system. When there is an anomaly in the injection system, the engine control module (ECM) turns on the engine trouble indicator (MIL) and stores an error code (DTC) in its memory. With the OBD diagnosis system, a generic diagnostic tool (DST) available in shops can be connected to consult and clear the DTC error codes and the frozen data.

Fail-safe function

The PGM-FI system is provided with a fail-safe function to secure a minimum running capability even when there is trouble in the system. When any abnormality is detected by the self-diagnosis function, running capability is maintained by pre-programmed value in the simulated program map. When any abnormality is detected in the injector, the fail-safe function stops the engine to protect it from damage.

MIL Check

When the engine is started the MIL will stay on for 5 seconds and then go off. If the MIL does not come off, troubleshoot DTC code. If the MIL does not come on, troubleshoot the MIL circuit.

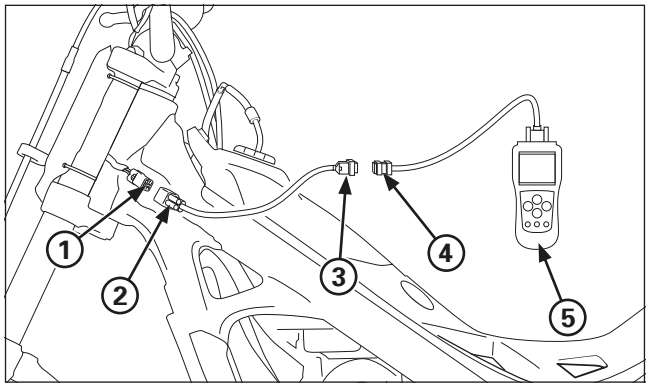

(1) 4P OBD (RED)
(2) 4P CONNECTOR
(3) 16P CONNECTOR
(4) OBD CONNECTOR
(5) DST

Connection of a generic diagnosis tool (DST)

The DTC error codes read by the generic diagnostic tool (DST), follow the format of the ISO standard and the connector of the DST is also the 16-pin of the ISO standard. Therefore, in order to connect the generic diagnosis tool (DST) to the motorcycle, it is necessary to use an adapter (reference 070MZ-K530101) for the 4-pin OBD connector (red), which is located behind the headlight housing.
To use the DST, refer to the instruction manual included with the purchased model.

Connect the diagnostic tool (DST) as shown in the illustration and start the motorcycle.
Check the active DTC codes and confirm the error code in the code list on page “MIL and DTC (ISO) error codes of the PGM-FI electronic injection system” on page 6-9.
Stop the motorcycle and solve the fault.
Start the motorcycle and with the help of the DST proceed to erase the fault codes stored in the speedometer.
Once the speedometer failure codes have been eliminated with the DST, even if it is not necessary, it is recommended to also delete the codes stored in the ECM (see page 6-7).

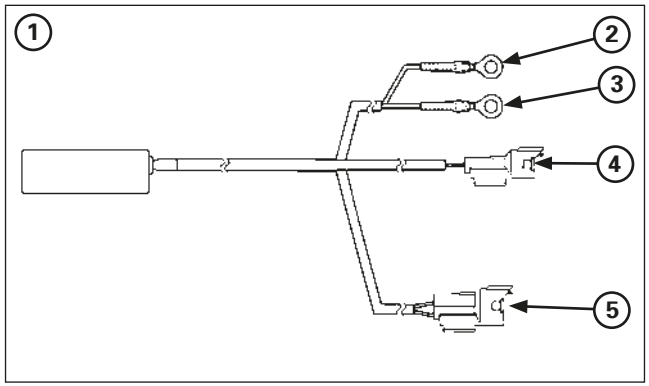

(1) PGM WARNING UNIT ASSEMBLY
(2) RED WIRE EYELET
(3) GREEN WIRE EYELET
(4) 2P (BLACK) CONNECTOR
(5) 4P (RED) CONNECTOR

DTC readout procedure

– Disconnect the fuel pump 2P (Black) connector.
– Disconnect the condenser 2P (Black) connector and connect the warning unit 2P (Black) connector to the wire harness side.

Tool:
PGM-FI warning unit assembly 38880-NN4-H00

– Make sure PGM-FI warning unit assembly power switch is in OFF position.
– Connect the waring unit 4P (Red) connector to the service check 4P (Red) connector.
– Connect the fully charged 12 V battery to the warning unit terminals (red wire eyelet to the battery positive terminal and green wire eyelet to the negative terminal).

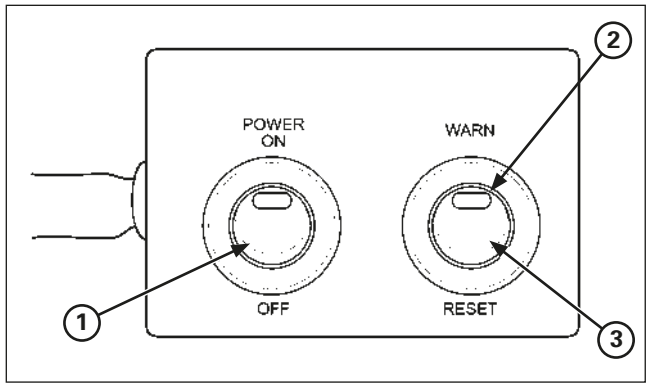

(1) POWER SWITCH
(2) MIL
(3) WARN/RESET SWITCH

– Turn the PGM warning unit "WARN/RESET" switch to the warning side as shown.
– Turn the power switch ON, check that the MIL.
– If the ECM has no self diagnosis memory data, the MIL will illuminate, when you turn the power switch ON.
– If the ECM has self diagnosis memory data, the MIL will start blinking when you turn the power switch ON.
– Note how many times the MIL blinks, and determine the cause of the problem (See page 6-8).

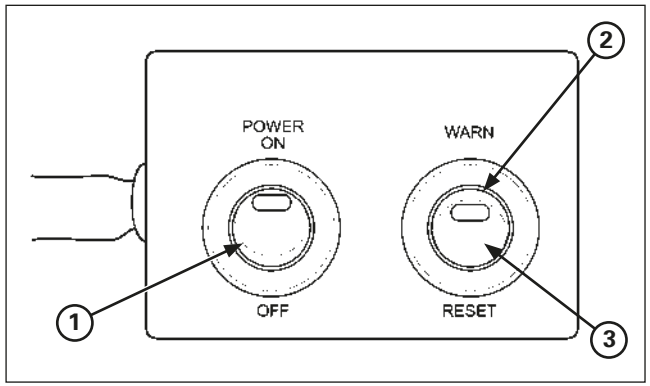

(1) POWER SWITCH
(2) MIL
(3) WARN/RESET SWITCH

Self-diagnosis Reset Procedure

– Connect the PGM-FI warning unit assembly to the wire harness and 12 V battery same procedure as Self-diagnosis (see previous step).
– Before turn ON the power switch, turn the warning/reset switch to the warning side.
– Turn the power switch ON, then turn the warning/reset switch to reset side.
– The MIL lights about 5 seconds.
While the MIL lights, turn the warning/reset switch to the warning side.
– Self-diagnosis memory data is erased, if the MIL turns off and start blinking.

• The "WARN/RESET" switch must be switched to "WARN" side while the indicator lights. If not, the MIL will not sart blinking

• Note that the self-diagnosis memory data cannot be erased if you disconnect the battery from the warning unit assembly before the MIL starts blinking.
PGM-FI Self-diagnosis Malfunction Indicator Lamp (MIL) Failure Codes

MIL and DTC (ISO) error codes for the PGM-FI injection system.

- The PGM-FI MIL denotes the failure codes (the number of blinks from 0 to 54). When the indicator lights for 1.3 seconds, it is equivalent to ten blinks. For example; a 1.3 second illumination and two blinks (0.5 second x 2) of the indicator equals 12 blinks. Follow code 12 troubleshooting.
- When more than one failure occurs, the MIL shows the blinks in the order of lowest number to highest number. For example; if the indicator blinks once, then seven times, two failures have occurred. Follow codes 1 and 7 troubleshooting.

Number of blinks (*)		ISO error codes (**)	Causes	Symptoms
0	No blinks		• Faulty ECM	• Engine does not start
	No blinks		• Faulty ECM (PGM-FI warning indicator output)	• Engine operates normally
	Stay lit		• Short circuit in service check connector • Faulty ECM (PGM-FI warning indicator output)	• Engine operates normally
1	Blink	P0160	• Open or short circuit in MAP sensor line (in the ECM) • Faulty MAP sensor	• Poor idle
7	Blinks	P0116	• Loose or poor contact on ECT sensor • Open or short circuit in ECT sensor wire • Faulty ECT sensor	• Hard starting at a low temperature (Simulate using numerical values; 90 ˚C/194˚F) • Cooling fan does not stop
8	Blinks	P0121	• Open or short circuit in TP sensor line (in the ECM) • Faulty TP sensor	• Poor engine response when operating the throttle quickly (Simulate using numerical values; throttle open 0˚)
9	Blinks	P0111	• Open or short circuit in IAT sensor line (in the ECM)	• Engine operates normally (Simulate using numerical values; 25˚C/77˚F)
12	Blinks	P0200	• Loose or poor contact on injector connector • Open or short circuit in injector wire • Faulty injector	• Engine does not start
21	Blinks	P0130	• Loose or poor contact on O2 sensor • Open or short circuit in O2 sensor wire • Faulty O2 sensor	• Engine operates normally
54	Blinks	P1000	• Loose or poor contact on bank angle sensor connector • Open circuit in bank angle sensor wire • Faulty bank angle sensor	• Engine starts but stops after few seconds.

(*) Warning unit
(**) Generic diagnosis tool (DST)

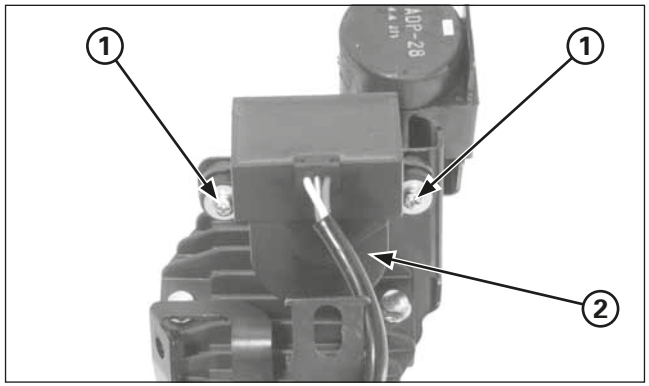

(1) SCREWS
(2) BANK ANGLE SENSOR

Bank angle sensor inspection

Remove the electric stay assembly from the frame (page 6-2).

Remove the screws and bank angle sensor from the sensor bracket.
Reinstall the electric stay and removed parts in the reverse order of removal.

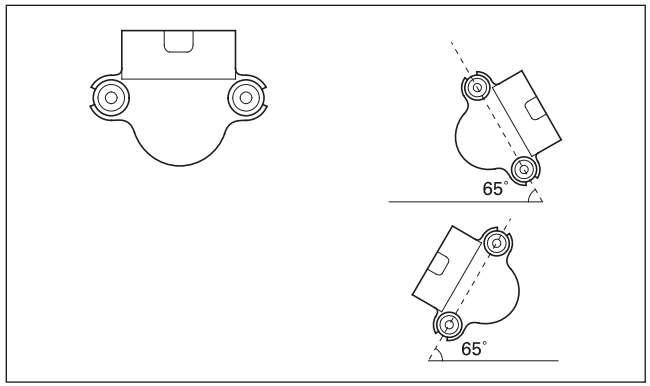

Connect the bank angle sensor 3P (Natural) connector.
With the arrow mark on the bank angle sensor facing up, start the engine.

Incline the bank angle sensor approximately 65 degrees to the left or right, make sure that the engine stops after few seconds.
If the engine stops, the bank angle sensor is normal.
If the engine does not stop, replace the bank angle sensor.

With the arrow/UP mark on the bank angle sensor facing up again, restart the engine.
The engine starts, the bank angle sensor is normal.

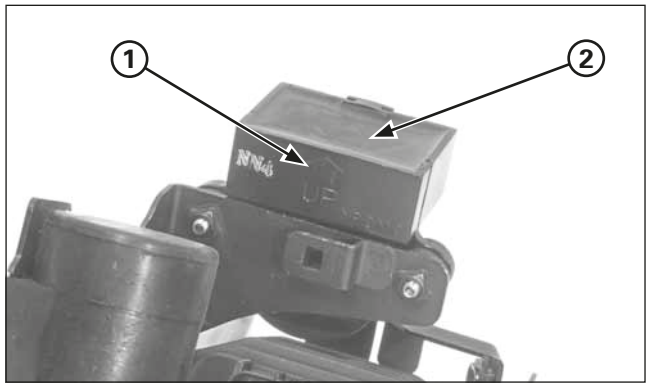

(1) ARROW/UP MARK
(2) BANK ANGLE SENSOR

Install the bank angle sensor in the reverse order of removal.
Install the bank angle sensor with its arrow/UP mark facing up as shown.

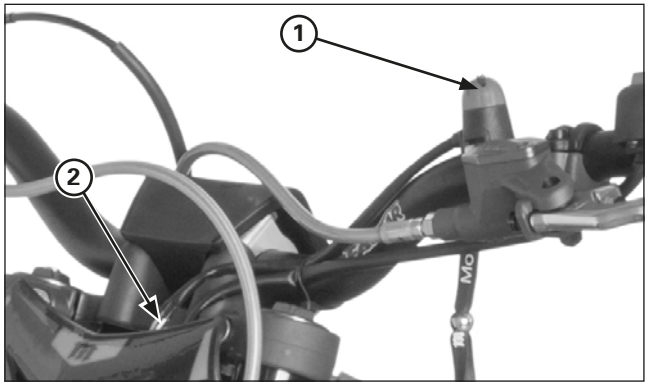

(1) MAGNETIC STOP SWITCH
(2) CONNECTORS

Engine stop switch inspection

Disconnect the engine stop switch connectors.
Check the engine stop switch for continuity.
There should be continuity.
There should be no continuity when the engine stop button is pushed.

Replace the switch if it is out of specification.

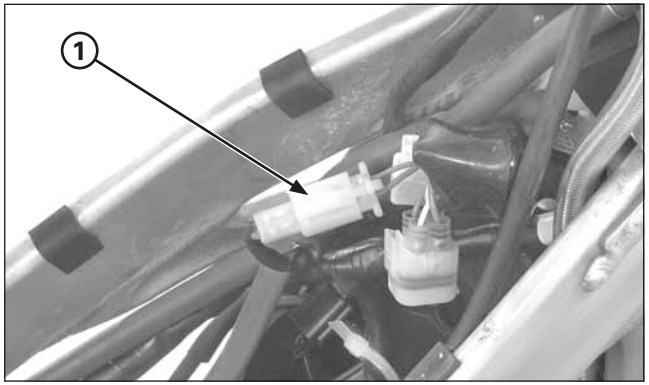

(1) 2P (NATURAL) CONNECTOR

Cooling fan system inspection

Fan motor inspection

Remove the fuel tank.
Disconnect the fan motor 2P (Natural) connector.

Directly connect a 12 V battery to the fan motor 2P (Natural) connector terminals of the fan motor side.
The fan motor is correct if the fan operates when the 12 V battery is connected.
If the fan motor does not operate, replace the fan motor assembly.

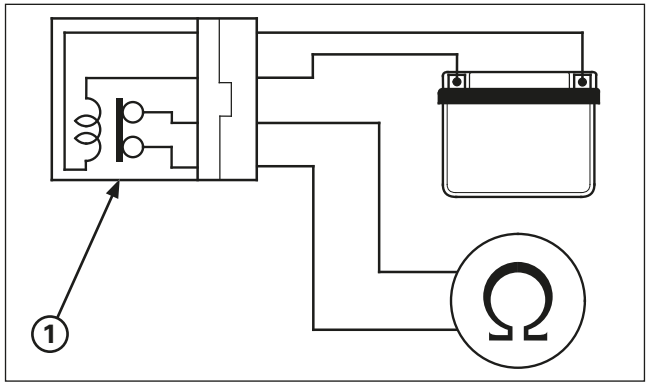

(1) FAN MOTOR RELAY

Fan motor relay inspection

Remove the fan motor relay.
Connect an ohmmeter to the fan motor relay connector terminals.

Connection: Red – Blue

Connect a 12 V battery to the following fan motor relay terminals.

Connection: Red – Black/Blue

There should be continuity only when the 12 V battery is connected.
If there is no continuity when the 12 V battery is connected, replace the fan motor relay.

Wiring diagram

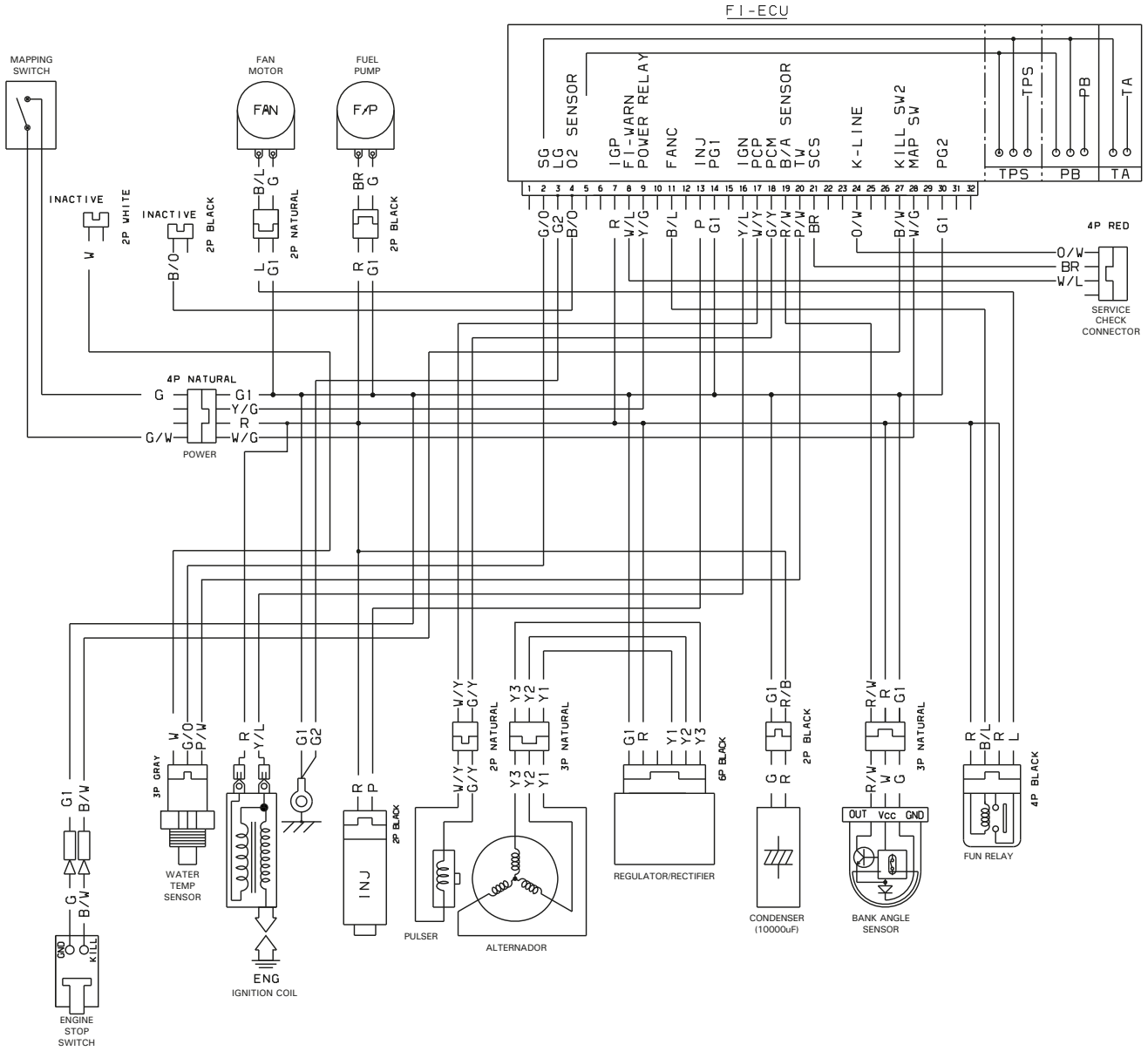

B	BLACK
Y	YELLOW
L	BLUE
G	GREEN
R	RED
W	WHITE
V	VIOLET
BR	BROWN
O	ORANGE
SB	LIGHT BLUE
LG	LIGHT GREEN
P	PINK
GR	GREY

California Proposition 65 Warning

⚠ WARNING

Operating, servicing and maintaining a passenger vehicle or off-highway motor vehicle can expose you to chemicals including engine exhaust, carbon monoxide, phthalates, and lead, which are known to the State of California to cause cancer and birth defects or other reproductive harm. To minimize exposure, avoid breathing exhaust, do not idle the engine except as necessary, service your vehicle in a well-ventilated area and wear gloves or wash your hands frequently when servicing your vehicle. For more information go to www.P65Warnings.ca.gov/passenger-vehicle.

7. Manufacturer and authorized representative for the USA markets

Manufacturer

Montesa Honda, S.A.U.

Carrer del Mar del Nord, 1
Pol. Ind. La Torre del Rector
08130 Santa Perpètua de Mogoda,
Barcelona, Spain

Authorized Representative USA market

Powersports Customer Relations
American Honda Motor Co., Inc.

P.O. Box 2200, Torrance, CA 90509-2200

Mailstop: 100-4W-5F

Telepone: (866) 784-1870

Website: *https://powersports.honda.com/contact-us*

California Proposition 65 Warning

⚠ WARNING

Operating, servicing and maintaining a passenger vehicle or off-highway motor vehicle can expose you to chemicals including engine exhaust, carbon monoxide, phthalates, and lead, which are known to the State of California to cause cancer and birth defects or other reproductive harm. To minimize exposure, avoid breathing exhaust, do not idle the engine except as necessary, service your vehicle in a well-ventilated area and wear gloves or wash your hands frequently when servicing your vehicle. For more information go to www.P65Warnings.ca.gov/passenger-vehicle.

Printed in Spain

U2NN4TRUMH